GOVERNMENT NOTICE NO. 288 Published On 12/4/2019

THE WEIGHTS AND MEASURES ACT
(CAP 340)

REGULATIONS

(Made under Section 54)

ARRANGEMENT OF REGULATIONS

Regulation *Title*

PART I
PRELIMINARY PROVISIONS

1. Citation
2. Interpretation.

PART II
CARE AND CUSTODY OF STANDARDS

3. Verification of Secondary standards.
4. Verification of working standards

PART III
VERIFICATION OF WEIGHTS, MEASURES AND INSTRUMENTS

5. Verification mark.
6. Stamp of obliteration.
7. Examination on dealers' premises.
8. Duties of a person who submits weight, measure or instrument.

9. Weights, etc., to be clean when presented.
10. Testing procedure.
11. Testing facilities for approval of patterns.
12. Authority to re-seal after repair, etc.
13. Use of liquid fuel, etc.
14. Weights, etc., not admitted.
15. Abbreviations.
16. Prescribed Form.

PART IV
WEIGHTS

17. Materials for weights.
18. Denomination of weights.
19. Flaws.
20. Mode of adjusting weights.
21. Shape of weights.
22. Permissible errors of weights.
23. Mode of stamping or certifying weights.

PART V
MEASURES OF LENGTH

24. Material and construction.
25. Denomination.
26. Tension for linked riband and tape measures .
27. Permissible errors of length.
28. Position of stamping.

PART VI
MEASURES OF CAPACITY

29. Material and construction.
30. Lips or retaining edges.
31. False bottom.
32. Publican's measure.
33. Dipping measures.
34. Taps.
35. Glass measures.
36. Earthenware.
37. Temperature compensators.
38. Subdivided metal measures.
39. Denomination

40. Apothecaries measures.
41. Method of testing.
42. Meniscus.
43. Permissible errors.
44. Method of stamping.

PART VII
WEIGHING INSTRUMENTS

45. Instruments not permitted.
46. Marking of weighing capacity.
47. Materials of Construction.
48. Graduations.
49. Plug for verification stamp.
50. Loose counterpoise and travelling poise.
51. Special trades.
52. Position when testing.
53. Test at maximum load and tests for sensitiveness.
54. Tests for error.
55. Balanced Instrument.
56. Weighing range

PART VIII
ELECTRONIC MEASURING INSTRUMENT OR SYSTEMS

57. Registration.
58. Special requirements.
59. Zero tracking mechanism.
60. Leveling.
61. Tare devices.
62. Contrast.
63. Record of registration .
64. Starting position.
65. Means of indication.
66. Marking.
67. Indicator.
68. Repeatability.
69. Installation and use.
70. Location of primary indicator.
71. Multi-interval instrument.
72. Permissible errors.

73. Manner of sealing.

PART IX
BEAM SCALES

74. Classification.
75. Prohibition of certain types of beam scales.
76. Balancing mechanism.
77. Half load test
78. Position of loading.
79. Permissible errors.
80. Position of stamping.

PART X
COUNTER MACHINES

81. Construction of counter machines.
82. Prohibition of certain types of counter machines.
83. Fall on counter machines.
84. Lateral movement test.
85. Position of weights during test.
86. Method of testing.
87. Counter machines with scoops.
88. Permissible errors.
89. Stamping plug.

PART XI
SPRING BALANCES

90. Suspension.
91. Width of index finger.
92. Dimensions of graduations.
93. Range of adjustable indicator.
94. Interval between graduations.
95. Position of the weight during test.
96. Testing of graduations.
97. Fatigue test.
98. Permissible errors.
99. Testing for sensitivity .
100. Position of stamping.

PART XII
DEAD-WEIGHT MACHINES

101. Construction.
102. Balancing.
103. Permissible errors.
104. Position of stamping plug.

PART XIII
PLATFORM MACHINES AND WEIGHBRIDGES

105. Test in situ.
106. Foundations.
107. Construction.
108. Travel.
109. Counterpoises.
110. Balancing.
111. Gravity balls.
112. Self-indicating machines.
113. Mode of testing.
114. Test at quarter load.
115. Relieving gear.
116. Permissible errors.
117. Position of stamping plug.

PART XIV
CRANE MACHINES

118. Construction.
119. Balancing.
120. Mode of testing.
121. Permissible errors.
122. Position of stamping plug.

PART XV
AUTOMATIC MACHINES

123. Adjusting mechanism.
124. Mode of testing.
125. Totalizing machines.

126. Permissible errors.
127. Certification .

PART XVI
SELF-INDICATING WEIGHING INSTRUMENTS

128. Graduations.
129. Pointer.
130. Value of graduation .
131. Mode of testing.
132. Permissible errors.
133. Position of stamping.

PART XVII
VEHICLE TANKS

134. Construction and design.
135. Quantity indicators, piping, gauges and valves.
136. Complete delivery requirements.
137. Ventilation and filler openings.
138. Position of indicator.
139. Design and sealing of quantity indicators.
140. Gauges to be identified with compartments.
141. Provision for expansion.
142. Method of testing.
143. Charts of gauges.
144. Emergency valves.
145. Permissible error.

PART XVIII
LIQUID MEASURING PUMPS

146. Prohibition of certain types.
147. Test in situ.
148. Denomination.
149. Prohibition of certain markings.
150. Sales indicators.
151. Marking of graduations.
152. Discharge signals.
153. Swing arms, flexible pipes and nozzles.
154. Sight glasses.
155. Test under working conditions.
156. Testing a liquid measuring pump.
157. Permissible errors.
158. Test by the owner or user.
159. Mode of Filling Measures of Capacity.

160. Provision of seals and sticker.

PART XIX
WEIGHTS, MEASURES AND INSTRUMENTS OF THE METRIC SYSTEM

161. Permissible errors.
162. Marking.
163. Weights.

PART XX
INSPECTION

164. Visiting trade premises.
165. Obliteration of stamp.

PART XXI
REPAIR OR MANUFACTURE OF MEASURING INSTRUMENT
OR SYSTEMS

166. Repairer and manufacturer to be licensed.
167. Types of licenses and forms.
168. Place of repair of instruments or systems.
169. Licensee to issue form.
170. A licensee to maintain register.
171. Duty to submit documents, measuring instrument or measuring systems.
172. Verification of test weights and measures.
173. Charges for verifications and adjusting fees.

PART XXII
PRE-PACKED GOODS INSPECTIONS, TESTING AND CERTIFICATION
FEES

174. Mode of labeling.
175. Powers to test and certify.
176. Government fees and certification.
177. Certificate of conformity.
178. Rejection Note.

PART XXIII
PACKED GOODS

179. Metrological requirement for packages
180. Identity of product
181. Label

182. Declared net quantity of packed product
183. Presentation of information
184. Misleading practices
185. Selection of samples and packages
186. Approval of batches
187. Action to be taken upon completion of examination of packages
188. Penalty
189. Power to test and certify

PART XXIV
LICENCING PROVISIONS

190. Application for licence.
191. Duration of licence and fees.
192. Display of licence.
193. Revocation of licence.
194. Appeal to the Minister.
195. Offence in relation to installment.

PART XXV
GENERAL PROVISIONS

196. General Offence.
197. Compounding of offences.
198. Revocation of G.N No. 229 of 2016 and G.N No. 535 of 1998.
199. Savings.

SCHEDULES

THE WEIGHTS AND MEASURES ACT
(CAP 340)

REGULATIONS

(Made under Section 54)

THE WEIGHTS AND MEASURES (GENERAL) REGULATIONS, 2019

PART I
PRELIMINARY PROVISIONS

Citation

1. These Regulations may be cited as the Weights and Measures (General) Regulations, 2019.

Interpretation

2. In these Regulations, unless the context otherwise requires-

Cap. 340

"Act" means the Weights and Measures Act;

"automatic machine" means a measuring instrument or measuring systems in which self-acting machinery carries out an automatic feed of the measurand which does not require an operator to carry out the measuring process;

"beam scale" means any equal-armed weighing instrument the pans of which are below the beam either suspended without an arrestment device or otherwise supported with or without an arrestment device;

"calibration" means the set of operations that establish under specified conditions, the relationship between values indicated by a measuring instrument or measuring system or values represented by a material measure, and the corresponding known values of measurand;

"verification chart" means the expression of the mathematical function V(h), in the form of a chart, which represents the relation between the height "h" (independent

variable) and volume "V" (dependent variable);

“capacity” in relation to instrument, means the maximum load which that instrument is constructed to measure, as marked or indicated on the instrument in accordance with the Act or these Regulations;

“compartment” in relation to a subdivided rail, vessel or road tank means any subdivided portions of the tank;

“counter machine” means an equal-arm weighing instrument of which the pans are above the beam and of a capacity of not more than 50kg;

“crane machine” means a suspended self-indicating, electronic, hydraulic or spring actuated weighing machine of a capacity of 1000 kg or above;

“dead-weight machine” means any weighing instrument similar in principle of construction to a counter machine of a capacity of more than 50 kg;

"destructive test" means a test which as a result of that test, the package on which it is carried out cannot thereafter be used for the purpose for which they were made up, and "non-destructive test" shall be construed accordingly;

“electronic instrument” means an instrument that operates with electronic components and is equipped with a digital means of indication;

“farm produce” include crop produce, sea products, forest products and livestock products;

“flow meter” means an instrument for measuring liquid that indicates automatically the quantity of liquid that has flowed through it;

“initial verification” means a verification of a new or a previously unverified measuring instrument or measuring system in accordance with approved type or metrological requirements prior to its placement on the market or putting into service;

"instrument" means any measuring instrument or measuring system;

“inspector” means a weights and measures officer appointed under section 14 of the Act;

“just” means any weight, measure, measuring instrument or measuring system which does not have an error greater than the limit of error as set out in the Third Schedule to these Regulations;

"label" means any written, printed or graphic matter affixed to, applied to, attached to, blown into, formed or moulded into, embossed on, or appearing upon a package containing any product for purpose of branding, identifying, or giving any information with respect to the product or the content of the package; however an inspector's tag or non-promotional text affixed to or appearing upon a product shall not be deemed to be a label that requires the label information prescribed by these Regulations;

"liquid measuring pump" means any measuring instrument or measuring system for the measurement of fluids;

"lot" or "batch" means in case of packages which have been stored, where the total number of such packages does not exceed 100, all those packages, and where the total exceeds 100 but not exceeding 10,000 all the packages of the same type and of the same production run, and in the case of the packages which are on or at the end of packing line, the maximum hourly output of packages;

“manufacturer” includes supplier, owner, user, operator or any person who is in possession of a measuring instrument or measuring system;

“measuring instrument or measuring system" means a weight or measure or any instrument for weighing or measuring in terms of any of the International System of Units "SI" base or derived or supplementary units such as units of mass, length, volume, capacity or, number whether or not the equipment is constructed to give an indication of the measurement made or other information determined by reference to that measurement;

“Minister” means Minister responsible for Trade;

“multi-interval device” means a device having one weighing range divided into partial weighing ranges each with different scale intervals, with the weighing range determined automatically according to the load applied (pre-determined ranges or intervals), both on increasing and decreasing load;

“multiple range scale” means a weighing instrument having two or more weighing ranges with different maximum capacities and different scale intervals for the same load receptor, each range extending from zero to its maximum capacity and the selection of the weighing range may be determined manually through a pushbutton or switch or

may automatically change to the higher capacity range once the load exceeds the capacity of the lower range;

"national standards" means the national reference standards of weights and measures maintained by the Tanzania Bureau of Standards under section 4 of the Standards Act;

"net" or "net content" means the quantity of commodity in the package exclusive of wrappers and any other material packed with such commodity and in these Regulations this term is designated by the symbol "an";

"nominal capacity" means the volume of liquid which a tank contains under rated operations, at reference temperature and as indicated on the tank or compartment;

"pre-packed goods" with its grammatical and cognate expression, means goods which, without the purchaser being present are placed in a package of whatever nature, so that the quantity of the product contained therein has a predetermined value and that value cannot be altered without the package or its lid or cap, as the case may be, being opened or undergoing a perceptible modification;

"principal display panel" means that part of a package that is most likely to be displayed, presented, shown, or examined under normal and customary conditions of display;

"quantity" in relation to goods contained in package, means the quantity by weight, measure or number of the goods contained in the package.

"rail or road tank" means a container which may be subdivided into two or more compartments, mounted on a wagon or motor truck and used for the sale or delivery by measures of capacity of paraffin, fuel, oil, petrol, or fluid substitutes;

"reference height (H)" means the distance measured along the vertical measurement axis, between the reference point and the foot of the vertical measurement axis, on the inner surface of the tank or on the dip plate;

"rejected" in relation to a weight, measure, measuring instrument or measuring system means any weight, measure, measuring instrument or measuring system examined by an inspector and found not to comply with the requirements of the Act;

"repaired" in relation to a weight, measure, measuring instrument or measuring system means any weight, measure,

measuring instrument or measuring system which since it was last stamped or verified has had some adjustment, other than balancing in the case of a weighing instrument made to any of its vital parts;

"self-indicating weighing instrument" means a weighing instrument on which the whole or part of the weight of the goods being weighed is indicated by a pointer moving over a scale or chart graduated in units of mass, or a graduated chart moving in relation to a fixed pointer, or digital display or by means of a printed record;

"sensitivity of a tank in the vicinity of a filling level h" means the change in the level, Ah, divided by the corresponding relative change in volume, h/ for the contained volume corresponding to the level;

"spring balance" means a mechanical weighing instrument in which the weight is determined by the extensions or compression of a spring, such extension or compression being indicated by a pointer on a dial or by a moving graduated scale;

"stamp of verification" means a stamp which bears a verification mark;

"subsequent verification" means a periodic verification of a measuring instrument or measuring system after the previous verification, as well as the verification of the measuring instrument or measuring system after repair;

"total contents" means the maximum volume of liquid which a tank may contain with underrated operating conditions at reference temperature;

"ullage height (C)" means the distance between the free surface of the liquid and the reference point measured along the vertical measurement axis;

"vehicle tank" means a container comprising of necessary piping, valves or meters which may be subdivided into two or more compartments mounted on a wagon, motor vehicle or any other assembly used for measurements and delivery of fluids;

"verification mark" means a mark which bears the coat of arms of the United Republic, month and the year of verification and if applicable it may bear the identification of verifying officer;

"verification station" means any place where the possessors or users of instruments are required to submit the instruments for verification pursuant to section 19(1) of the Act;

"verification sticker" means an adhesive label that bears the

verification mark; and

"vertical measurement axis" means the vertical line on which the levels of liquid are gauged.

PART II
CARE AND CUSTODY OF STANDARDS

Verification of secondary standards

3.-(1) The accuracy of the secondary standards shall be verified at least once in every two years by comparing such standards with the National Standards.

(2) The Commissioner shall, for the purposes of verifying the accuracy of secondary standards, submit the secondary standards to the Tanzania Bureau of Standards for calibration.

(3) Tanzania Bureau of Standards shall, after calibrating secondary standards against National Standards, issue the certificate of calibration to the Commissioner.

(4) The Commissioner shall, after receiving the certificate issued under sub regulation (3), authenticate the secondary standards by issuing a certificate of verification in a prescribed Form A set out in the First Schedule to these Regulations.

Verification of working standards

4.-(1) An inspector shall verify the accuracy of the working standards at least once in every twelve months by comparing the standards with the secondary standards.

(2) The Commissioner shall, where the inspector has verified working standards, authenticate the standards by issuing a certificate of verification in a prescribed Form B set out in the First Schedule to these Regulations.

PART III
VERIFICATION OF WEIGHTS, MEASURES AND INSTRUMENTS

Verification mark.

5.-(1) An inspector shall stamp just weights, measures and instruments with either a stamp of verification or verification sticker which bears a verification mark.

(2) A verification mark shall contain-

(a) Coat of arms of the United Republic of Tanzania as shown below-

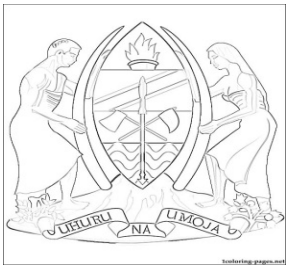

(b) a letter indicating the month of verification in the following manner-

(i) A for January;
(ii) B for February;
(iii) C for March;
(iv) D for April;
(v) E for May;
(vi) F for June;
(vii) G for July;
(viii) H for August;
(ix) I for September;
(x) J for October;
(xi) K for November; and
(xii) L for December

(c) The year of verification which shall be indicated by the last two digits, thus the year 2017 shall be shown as "17".

Stamp of obliteration

6.-(1) The stamp of verification on a weight, measure or instrument shall be obliterated by means of a stamp of the following six-pointed star design-

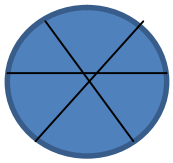

(2) Any weight, measure or instrument bearing the stamp of obliteration in subregulation (1) shall be deemed to be unstamped.

(3) Where any instrument is required to be stamped or sealed on more than one place, the obliteration of any one stamp or the breaking of any one seal or sealing device shall render the instrument unstamped.

Examination on dealers' premises

7.-(1) Weights, measures and instruments may be examined on the premises of a repairer or dealer upon request.

(2) The travelling expenses of the inspector and the cost of transport of standards and equipment shall be paid by the repairer or dealer in addition to the prescribed verification fee.

Duties of a person who submits weight, measure or instrument

8. An inspector may require any person who submits any weight, measure or instrument for examination to-

(a) disassemble it to such an extent as to enable him to examine the working parts; and
(b) provide sufficient labour for the proper and expeditious handling of the standards or any material which is to be used in the testing of any such weight, measure or instrument.

Weights, etc. to be clean when presented

9.-(1) All weights, measures or instruments shall be in a clean condition before being presented to an inspector.

(2) Where the weight, measure or instrument is not clean, an inspector shall require the owner or user to clean such weight, measure or instrument.

(3) A person who fails to comply with sub regulation (2) shall, in addition to stamping fees, be charged a sum of money equal to the fees for stamping of any weight or measure of a similar denomination or capacity.

Testing procedure

10. An inspector shall, before stamping any weight, measure or instrument, ascertain if it complies with the requirements of the Act and these Regulations.

Testing facilities for approval of patterns

11.-(1) Weight, measure, or instrument shall not be verified, stamped or authorized for use for trade unless it is of a-

(a) pattern approved by the Minister; or
(b) class or kind exempted by regulation from the provisions of these Regulations.

(2) The Minister shall, upon verification in sub regulation (1) issue a certificate of approval in a prescribed Form C as set out in the First Schedule to these Regulations.

Authority to

12. The Commissioner may authorise any qualified

reseal after repair, etc

person in the erection, repair and adjustment of the liquid measuring pumps under Part XVIII to break any seal or sealing mechanism on the instrument and re-seal the same subject to the conditions that-

(a) the Commissioner may, at any time, withdraw any such authorization;

(b) the person authorised be equipped with stamped testing measures of a pattern approved by an inspector and test each instrument for accuracy before sealing or re-sealing;

(c) the person authorised seals or re-seals an instrument only by means of stamping pliers so constructed as to impress upon every seal or sealing mechanism such mark and number as the Commissioner may allot to him for the purpose of identification;

(d) the person authorised reports in writing to the inspector in Form D as set out in the First Schedule to these regulations within twenty four hours after sealing or re-sealing; and

(e) the owner or user of the instrument sends an inspector a request in writing to verify the instrument within twenty four hours of such sealing or re-sealing.

Use of liquid fuel, etc

13.-(1) An inspector may at any time withdraw any liquid fuel or lubricating oil from a measuring instrument or measuring system for the purpose of testing such instrument.

(2) An inspector shall return to the tank or container any liquid, fuel or lubricating oil withdrawn pursuant to sub regulation (1) and furnish to the user or owner a written statement of the quantity withdrawn.

Weights, etc not admitted

14. An inspector shall not admit for verification any weight, measure, weighing instrument, measuring instrument or measuring system or price computing instrument which-

(a) is not complete; or

(b) bears any mark which might be mistaken for a stamp of verification; or

(c) is not sufficiently strong to withstand the ordinary wear and tear of use in trade; or

(d) has removable parts, the removal of which would affect its accuracy unless the parts are such that the weight, measure or instrument cannot be used without them; or

(e) has reversible or interchangeable parts, the reversal

or interchange of which would affect its accuracy unless such parts are clearly and indelibly marked to indicate their position; or

(f) is not properly constructed, or when, in his opinion, it appears to be of a pattern which might facilitate the perpetration of fraud

Abbreviations

15. The denomination of a weight, measure, or the capacity of an instrument, if not marked in full, shall be indicated by one of the abbreviations specified in the Act.

Prescribed form

16. Subject to section 35(2) of the Act, the Commissioner may, in a manner set out in Form E of the First Schedule, authorise any person in such area to use or have in his possession for use in trade any weight, measure, measuring instrument or measuring system which is not stamped with the prescribed verification mark for a period not exceeding six months or until such weight, measure, measuring instrument or measuring system is verified in accordance with the provision of the Act, whichever is the less.

PART IV
WEIGHTS

Materials for weights

17.-(1) A person shall make weights using any metal other than lead, except where the lead is inserted for the purpose of adjustment.

(2) A person shall not make-

(a) weights using soft metals and soft alloys, such as tin or solder; or

(b) cased weights and weights composed of two or more different unalloyed metals.

Denomination of weights

18.-(1) A person shall put the name of the maker on a weight in letters not exceeding half the size of the letters indicating the denomination.

(2) Weights other than apothecaries' weights shall not be marked with more than one denomination.

Flaws

19. All weights shall be-

(a) free from flaws and cavities; and

(b) smooth on all surfaces.

Mode of adjusting

20.-(1) Weights shall-

weights

(a) bare one adjusting hole on the under surface of the weight and shall not extend to the upper surface; and

(b) the hole shall be undercut and plugged with a lead of sufficient thickness which will cover the bottom of the hole to ensure that it remains securely in position.

(2) The weights from-

(a) 1g to 10g shall be solid, without an adjusting hole;

(b) 20g to 50g may have an adjusting hole; and

(c) 100g and above shall have an adjusting hole.

(3) The volume of the adjusting hole shall not be greater than 1/4 of the total volume of the weight and after the initial adjustment, approximately 1/2 of the total volume of the adjusting hole shall be empty.

Shape of weights

21.-(1) Weights shall have a simple geometric shape with no sharp edges, or cavities on their surface.

(2) Weights of a given weight set shall have the same shape in sub regulation (1) except for weights of one gram or less.

(3) Weights less than 1g shall be flat polygonal sheets or wires, with shapes set out in Part A of the Second schedule to these Regulations-

(4) Weights of nominal values from 1g to 50kg may have the shapes as set out in Part B of the Second schedule to these Regulations.

(5) Without prejudice to sub regulation (4), weights of 5kg to 50kg may have-

(a) different shapes suitable to their methods of handling;

(b) rigid handling devices embodied with weights, such as axles, handles, hooks or eyes instead of a lifting knob; and

(c) rectangular parallelepipeds with rounded edges and a rigid handle

(6) Weights greater than or equal to 50kg may have cylindrical, rectangular or other suitable shapes and may be provided with rigid handling devices.

Maximum permissible errors of weights

22. The maximum permissible errors, on the verification of weights shall be as specified in Table I set out in the Third Schedule to these Regulations.

Mode of stamping or certifying weights

23. An Inspector shall-

(a) stamp the weights on the lead in the adjusting hole;

(b) certify the weights without an adjusting hole in a manner to be prescribed by the Commissioner.

PART V
MEASURES OF LENGTH

Material and construction

24.-(1) Measures of length shall be-

(a) made of steel, brass, hard wood, woven tape or other material that may be approved by the Commissioner;
(b) straight and strong; and
(c) clearly denominated, graduated and indelibly marked.

(2) Wooden measures of fifty centimeters or more in length shall have both ends capped with metal and the caps shall be riveted.

(3) Any measures with sliding or caliper arms shall have a play necessary for easy movement.

(4) A subdivided measure of length shall have its numbered divisions and subdivisions of longer lines than the minor graduations.

Denomination

25.-(1) The graduation mark for rigid measures of length shall be-

(a) every millimeter;
(b) every millimeter for the first ten centimeters and thereafter at every five millimeters; and
(c) every ten millimeters numbered.

(2) The graduation mark of flexible measures of length shall be clear, uniform, indelible and made to ensure easy and an unambiguous reading.

(3) The graduation lines shall be-

(a) reasonably straight, perpendicular to the axis of the tape measure and of uniform thickness throughout the length; and
(b) made to form a clear and distinct scale and their thickness does not cause any inaccuracy of reading.

Tension for linked riband and tape measures

26.-(1) An Inspector shall test linked riband and tape measures when subjected to a tension or pull as follows-

(a) ordinary riband or tape measures….1kg;

(b) metal riband or tape measures……..5kg; and
(c) linked measures…… ...7kg.

(2) The measure under test shall be supported throughout its whole length on a plane and even surface.

Permissible errors of measures of length

27. The permissible errors on the verification of measures of length shall be as set out in Table II set out in the Third Schedule to these Regulations.

Position of stamping

28. An inspector shall stamp-

(a) measures of length at the beginning of the scale on each graduated side.
(b) linked measures on a metal label or disc permanently attached to the measure, or on the brass handle.

PART VI
MEASURES OF CAPACITY

Material and construction

29.-(1) Measures of capacity shall be made of-

(a) glass;
(b) earthenware;
(c) tin;
(d) tin alloys;
(e) pewter;
(f) brass;
(g) bronze;
(h) copper;
(i) tinplate;
(j) white metal;
(k) aluminium;
(l) nickel;
(m) nickelled or nickel-plated steel or sheet iron;
(n) enameled metal; or
(o) any other material approved by the Commissioner.

(2) The inner parts of measures made of brass, bronze or copper shall be tinned.

(3) The coating of nickel on measures shall-

(a) be uniform; and
(b) not show any sign of peeling.

(4) Where there are strengthening ribs or bands inside the measure, such ribs or bands shall not show sub divisions by indentation or otherwise which may be mistaken with graduations.

Lips or retaining edges

30.-(1) The capacity defining line in measures fitted with a lip or retaining edge shall be sharp and regular.

(2) The lip or retaining edge of a measure shall not exceed the capacity of that measure by more than ten percent of the marked capacity.

False bottom

31. A measure which is not completely emptied when tilted to an angle of one hundred and twenty degrees from the vertical shall not be stamped.

Publican's measure

32.-(1) A publican's metal, glass or earthenware measure shall have a spout or projecting mouth and may have a bottom rim.

(2) Rim in measures of not more than five hundred millilitres shall not project more than ten millimeters below the bottom of the measure.

Dipping measures

33. Where a person uses a metal dipping measure of a capacity not exceeding two litres for the sale of milk-

(a) the metal dipping measure, shall be of circular or elliptical section with vertical sides; and
(b) the height of metal dipping measure shall not differ by more than ten percent from one and a half times the mean diameter of the section.

Taps

34. A person shall not use a measure fitted with a tap unless it can be completely emptied through the tap without tilting.

Glass measures

35.-(1) A person shall not use a glass measure unless the capacity is defined by –

(a) the brim of the measure; or
(b) a line of at least fifty millimeters in length at a distance of not less than ten millimeters nor more than thirty millimeters from the brim.

(2) Subdivisions in subdivided glass measures not exceeding five litres, other than apothecaries' measures, shall be defined by lines of at least twenty five millimeters in length.

Earthenware

36.-(1) A person shall not use an earthenware measure unless its capacity is defined by the brim or an indelible line marked on the inside of the measure.

(2) The distance of the bottom of the line from the brim shall not exceed ten millimeters on measures of not more than

one litre and twenty millimeters on measures of higher capacities.

Temperature compensators

37.-(1) Where a measure of capacity is provided with a temperature compensator, a graduated scale shall be fitted indicating "plus" and "minus" in either side of zero.

(2) For the purposes of this regulation a suitable thermometer and hydrometer shall be always available to enable the operator to adjust the compensator when necessary.

Subdivided metal measures

38.-(1) The capacity of subdivisions of metal measures shall not exceed five litres.

(2) A subdivided metal milk measure of a capacity exceeding two litres shall be fixed with two opposite graduated metal strips or series of tablets inside extending the whole depth of the measure and securely soldered on the measure.

(3) The graduations on metal strips shall be marked in sharply incised lines.

Denomination

39.-(1) Every measure of capacity shall have its denomination clearly, permanently and indelibly marked on the outside of the body but not on the handle, bottom, rim or edges.

(2) The denomination on a glass measure in which the capacity is defined by a line shall be marked at the line.

(3) The denomination on an enameled metal measure shall be marked in a distinctly different colour from that of the body of the measure.

(4) The denominations on all subdivided measures shall be marked on the graduated strips or on the tablets as well as on the outside.

Apothecaries measures

40.-(1) Apothecaries measures may be of cylindrical or conical form.

(2) The width of the smallest graduation on a glass measure shall not be less than two millimeters.

(3) A measure marked with equivalents in weight may be permitted provided that the words “of water” are marked on the outside in addition to the denomination.

Method of testing

41.-(1) Every measure shall be tested by filling the standard with water and emptying the contents into the measure submitted for verification.

(2) Where the capacity is indicated by a line, the measure shall be tested to the bottom of the line.

(3) A measure provided with a lip or retaining edge shall

be tested to the bottom of the lip or retaining edge.

Meniscus

42. When testing a glass measure of the capacity which is not defined by the brim, the level of water shall be taken at the bottom of the meniscus.

Permissible errors of measures of capacity

43. The permissible errors on the verification of measures of capacity and apothecaries measures shall be as specified in Table III, set out in the Third Schedule to these Regulations.

Method of stamping

44.-(1) The stamp of verification shall, in the case of glass, earthenware and enameled metal measures, be etched or sand blasted beneath or near the denomination.

(2) The stamp of verification shall-

(a) in metal measures other than lip or rimmed measures be stamped near the denomination;

(b) in metal measures provided with a lip or retaining edge be stamped on the bottom of the inside of the lip or retaining edge;

(c) in graduated metal measures be stamped on a solder stud affixed to the inside strip or tablet near to the top graduation and on the outside of the measure near the denomination; and

(d) on sheet metal measures be stamped on solder stud affixed to it.

PART VII
WEIGHING INSTRUMENTS

Instruments not permitted

45. The weighing instrument shall not have-

(a) a broken scoop, pan or plate;

(b) a plate which is chipped, cracked or porous to such an extent that it has become readily absorbent; or

(c) counterpoise weights representing a greater or less weight than the marked capacity of the instrument

Marking of weighing capacity

46.-(1) The weighing capacity of a weighing instrument shall be prominently and indelibly marked on an instrument.

(2) The full capacity in dial machines fitted with a supplementary weigh bar shall be marked on a prominent part of the machine.

Materials of Construction

47.-(1) Beams, steelyards, levers, rods, links, legs and stays shall be constructed of metal.

(2) Knife edges and a bearing shall be made of hard steel, agate or other material approved by the Commissioner and be fitted so as to allow the beam or steelyard to move easily.

(3) The whole length of a knife edge shall rest on the bearing and be fitted such that it cannot twist or otherwise get out of alignment.

Graduations

48.-(1) The graduations on a steelyard shall consist of defined notches or sharply incised lines which clearly indicate the position of all sliding poises.

(2) The indications on the dials of platform machines or weighbridges shall be indelibly marked by fine lines.

Plug for verification stamp

49.-(1) A lead plug for receiving the stamp of verification in every weighing instrument shall be inserted in an easily accessible part of the instrument.

(2) The hole in which the stamp in sub regulation (1) is inserted shall be undercut with the face of the plug flush with the metal part.

Loose counterpoise and travelling poise

50.-(1) A person shall not use a weighing instrument unless such counterpoise weights have one undercut adjusting hole containing sufficient lead to cover the bottom of the hole.

(2) A travelling poise with loose material shall not be permitted.

Special trades

51. A weighing instrument used for weighing the following special trades shall be of accuracy Class II or I-

(a) precious metals;
(b) precious stones;
(c) chemicals; and
(d) drugs.

Position when testing

52. A person shall-

(a) test movable instruments provided with a base on a level plane; and
(b) suspend instruments which are suspended in use when testing.

Test at a maximum load and tests for sensitiveness

53. A person shall test:

(a) a weighing instrument to its maximum capacity.
(b) a weighing instrument of the vibrating type for sensitiveness by loading it with its maximum load with the beam or steelyard in a horizontal position and ascertaining that it turns with the addition of the

amount shown in Table IV, V, VI, VII, VIII, IX and X as set out in the Third Schedule to these Regulations.

Tests for error

54. A person shall test a weighing instrument of the vibrating type for error by ascertaining the weight in excess or deficiency required to bring the beam or steelyard of the instrument to a horizontal position when fully loaded.

Balanced instrument

55. An inspector shall ascertain that-

(a) an instrument is properly balanced when not loaded;
(b) he has sufficient room for oscillation; and
(c) the beam or steelyard returns to the position of equilibrium or that the indicator returns to the zero mark when a load is removed.

Weighing range

56. A weighing range or segment shall be defined by its interval size, its minimum capacity, and its maximum capacity.

PART VIII
ELECTRONIC MEASURING INSTRUMENT OR SYSTEMS

Registration

57.-(1) Registration by electronic instrument shall-

(a) include visual indication and recorded representation of quantity, and may include unit price and monetary value;
(b) be clear, definite and easily legible under conditions of normal use of an electronic instrument.

(2) An electronic instrument shall be provided with means of registration that are appropriate for the class, type or design of instrument and for its intended service, installation and use.

(3) Where electronic instrument is installed with two or more means of registration that has the same units of measurement, the registration shall where the values of minimum increment of registration are the same, be exactly equal.

Special requirements

58. Where an electronic instrument requires special requirements on electrical power supply, the frequency, voltage, current and any special limitations on the stability or quality of power supply required to enable the instrument to measure accurately, shall be marked on the instrument.

Zero tracking mechanism

59.-(1) The overall range of the zero-tracking mechanism of an electronic instrument shall not exceed four per

cent of the rated capacity of an instrument.

(2) An electronic instrument may be equipped with zeroing devices whose operation shall result in accurate zeroing which does not cause incorrect measuring results.

Leveling

60. An electronic instrument shall be fitted with a levelling device and a level indicator.

Tare devices

61.-(1) An electronic instrument shall have one or more tare devices.

(2) The operation of the tare devices shall result in accurate zeroing and ensure correct net weighing.

(3) The operation of the preset tare device shall ensure correct determination of the calculated net value.

Contrast

62. The luminosity contrast between the visual indications and the background of the indicator of an electronic instrument shall have a ratio equal to or greater than four to one.

Record of registration

63. Where an electronic instrument provides a printed record of the registration on a ticket or form, the ticket or form shall contain a statement of-

(a) the quantity measured in the transaction;
(b) the unit price for the commodity measured when the computed price is shown;
(c) the name, symbol or abbreviation appropriate to the unit of registered measurement applicable to the unit price and total price; and
(d) any other information as may be required by the Act and these Regulations.

Starting position

64. An electronic instrument equipped with an indicator or printer shall be capable of giving a visual or printed indication that the device has been properly returned to starting position before any commodity is measured.

Means of indication

65. Electronic digital means of indication for an electronic instrument shall-

(a) have digits of the same height;
(b) set apart a decimal sub multiple of the unit by a decimal point; and
(c) have bright displayed digits and other information that are easily readable under normal conditions of use.

Marking

66.-(1) There shall be a mark, in association with digital means of indication, on an electronic instrument defining words, name, symbol or abbreviation for the unit or units of measurement appropriate in size.

(2) Any mark in association with digital registration shall not be obliterated or illegible under normal conditions of use.

Indicator

67. An indicator and printer for monetary value shall conform to the same specifications as the indicator and printer for registration of units of quantity.

Repeatability

68. An electronic instrument shall be capable of repeating its registration for each identical load or quantity delivered regardless of repeated manipulations of any or all of the elements of the electronic instrument in a manner approximating normal conditions of its use.

Installation and use

69.-(1) A person shall install and use an electronic instrument in the manner that it is protected from abnormal environmental factors that could have an adverse effect on its performance.

(2) A person shall install electronic instrument other than a scale used for prepackaging in a manner that the indications of the primary means of indication can be read by any party to the transaction for which it is being used:

Provided that, if such an installation is not practicable, a secondary means of indication may be provided to allow the parties to the transaction to read the indications.

Location of primary indicator

70. A primary indicator of an electronic instrument shall be located as to allow an unobstructed view of the load-receiving element or the delivery outlet of an electronic instrument.

Multi-interval instrument

71.-(1) A multi-interval instrument shall be tested as a single instrument.

(2) Increasing and decreasing load tests for a multi-interval instrument shall be conducted the same as a single interval or single range instrument.

Permissible errors

72.-(1) An error of indication shall not exceed the maximum permissible error of indication as shown in table V set out in the Third Schedule to these Regulations.

(2) The maximum permissible errors set out in sub regulation (1) shall apply to the net value and tare value for all possible loads, excluding preset tare values.

(3) The limits of error in a multiple range scale shall be determined on the basis of the class of the device and the value of the verification scale interval "e" of the partial range corresponding to the load applied.

Manner of sealing

73. An electronic Measuring Instrument or System shall be provided with a suitable sealing arrangement to receive the stamp of verification.

PART IX
BEAM SCALES

Classification

74.-(1) Beam scales shall be divided into three classes-

(a) Class A which includes only chemical and assay balances and other beam scales provided by means for relieving all the bearings and knife edges which meets the requirements of Table VI as set out in the Third Schedule to these Regulations and need not marked with a class mark;
(b) Class B which includes only beam scales which meets the requirements of Table VII set out in the Third Schedule to these Regulations; and
(c) Class C which includes all beam scales which meets the requirements of Table VIII set out in the Third Schedule to these Regulations.

(2) Every beam scale falling within either Class B or C shall be indelibly marked with the appropriate class mark.

Prohibition of certain types of beam scales

75. The following beam scales shall not be admitted for verification-

(a) accelerating beam scales;
(b) new swan neck beam scales of a capacity of less than 15kg or the beam of which is less than sixty centimeter in length between the terminal knife edges;
(c) swan neck beam scales not fitted with flat end bearing and swivel hooks;
(d) beam scales with loaded weight pans; and
(e) beam scales of a capacity of less than 100kg with wooden scale boards.

Balancing mechanism

76.-(1) An attachment for adjusting the balance of a beam scale shall be permanently fastened.

(2) A ball or a box fitted for occasional adjustment shall be fixed in a manner that it cannot easily be tampered with.

(3) A beam scale with wooden scale boards shall be provided with a balance ball or box.

Half-load test

77. A beam scale with the pans loaded to half capacity shall not be verified if it loses accuracy when knife edges or bearings are laterally moved forwards or backwards within their limits of movement.

Position of loading

78. A beam scale shall not be verified if it is not just irrespective of the position of the load on the pan.

Permissible errors

79. The permissible errors on the verification of beam scales shall be as specified in Tables VI, VII and VIII as set out in the Third Schedule.

Position of stamping

80.-(1) The stamping plug on beam scale shall be inserted immediately above or below the central knife edge.

(2) Class A beam scale may be stamped on the pans in case where the delicate construction of the beam might be affected by the insertion of a plug.

PART X
COUNTER MACHINES

Construction of counter machines

81.-(1) Where the beam of a body has two sides, it shall be connected by not less than two cross bars.

(2) The supports of the pans shall be of suitable rigid structure, such as cross members strengthened by straps.

(3) A centre fork shall be fixed so that it cannot twist or get out of place.

(4) The bearing surface, knife edges and points of contact of all stays, loops and hooks shall have hardness of at least 58 Rockwell C scale.

(5) A counter machine shall have a balance box or other receptacle for balancing material fixed beneath one of the pans to contain loose material not exceeding one percent of the capacity of the machine.

Prohibition of certain types counter machines

82. The following counter machines shall not be admitted for verification-

(a) accelerating counter machines; and
(b) counter machines of the "Roberval" type in which the stays forming the lower side of the parallelogram

are not in one piece.

Fall on counter machines

83. The minimum "fall" either way on counter machines shall be as follows:

capacity	millimeter
not exceeding 2kg.	6
above 2kg. and not exceeding 5kg.	8
above 5kg and not exceeding 10kg.	10
above 10kg and not exceeding 25kg.	12
above 25kg and not exceeding 50kg.	13

Lateral movement test

84. An instrument with the pans loaded to half capacity shall not be verified if it loses accuracy when knife edges or bearings are laterally moved forwards or backwards within their limits of movement.

Position of weights during test

85. Where the goods pan is not in the form of a scoop, the counter machine shall indicate the same weight within half the prescribed limits of error, if the centre of a load equal to half the capacity placed on the goods pan is moved anywhere within a distance from the centre equal to one-third of the length of the pan or if the pan has a vertical side, against the middle of that side the weight being entirely on the weights pan, but in any position on it.

Method of testing

86. The counter machine shall be tested for-

(a) sensitivity at full capacity; and
(b) error at half load and full load.

Counter machines with scoops

87. When the goods pan is in the form of a scoop the prescribed limits of error shall not be exceeded if half the full load is placed against the middle of the back of the scoop and the other half in any position on the scoop.

Permissible errors

88. The errors permissible on the verification of counter machines shall be as specified in Table IX as set out in the Third Schedule to these Regulations.

Stamping plug

89. The stamping plug on counter machine shall be inserted in an easily accessible part of the beam or body of the machine.

PART XI
SPRING BALANCES

Suspension

90. A spring balance of a capacity of not more than 15kg with the goods pan below the spring shall be permanently suspended from a stand, support or bracket.

Width of index finger

91. The width of an extremity of the index finger shall not exceed 0.8mm and not more than 2.5mm from the scale or dial.

Dimensions of graduations

92.-(1) The scale shall be graduated into equal parts.

(2) The minimum width of a graduation of the scale shall not be-

(a) less than 1.6mm for a capacity of not exceeding 15kg; and
(b) less than 3.2mm for a capacity of 20kg and above.

Range of adjustable indicator

93. The range of an adjustable indicator shall not exceed one percent of the capacity of the instrument.

Interval between graduations

94. The weights corresponding to the interval between consecutive graduation marks shall be as follows-

Capacity	limit
500g not exceeding	3g
1kg to 3kg not exceeding	7g
5kg to 7kg not exceeding	14g
10kg to 15kg not exceeding	28g
20kg to 30kg not exceeding	55g
50 kg and over not exceeding	1/200th of capacity

(2) Where a graduation commences at a fixed load and there is no load, the position of the indicator shall be indicated by a zero mark.

Position of the weight during test

95.-(1) When the pan is above the spring and not in the form of a scoop, the spring balance shall indicate the same weight within half the prescribed limits of error, if the centre of a load equal to half the capacity placed on the goods pan is moved anywhere within a distance from the centre equal to one-third of the length of the pan or if the pan has a vertical side, against the middle of that side the weight being entirely on the pan, but in any position on it.

(2) When the goods pan is in the form of a scoop the prescribed limits of error shall not be exceeded if half the full

load is placed against the middle of the back of the scoop and the other half in any position on the scoop.

Testing of graduations

96.-(1) Each -

(a) numbered graduation, shall be tested; and
(b) intermediate graduation, may be tested.

(2) An instrument shall be deemed to be just if it satisfies a forward and backward test.

Fatigue test

97. A spring balance may be tested for efficiency or ability to recover by loading with a load equal to its maximum capacity for a period not exceeding twenty four hours and be tested for accuracy after four hours

Permissible errors

98. A person who tests a spring balance of a capacity of not more than 15kg shall-

(a) satisfy the requirements as regards error of counter machine of similar capacity; and
(b) in case of a spring balance of a capacity of 20kg and above, ensure that the error does not exceed the weight corresponding to a quarter of the interval between consecutive graduations.

Testing for sensitivity

99. A person shall not test spring balance for sensitivity.

Position of stamping plug

100. The stamping plug on a spring balance shall pass through the dial and the frame.

PART XII
DEAD-WEIGHT MACHINES

Construction

101.-(1) The bearing surfaces and points of contact of hooks, stays and loops shall have hardness of at least 58 Rockwell C scale.

(2) The center shall have rectangular shoulder fitted and firmly secured into rectangular holes.

(3) The bearing surface of the adjustable slides shall be made of hard steel and the stems holding them in position be secured by lock nuts.

(4) The goods platform shall not exceed the length and width of the beam.

(5) Folding wings shall not increase the dimensions exceeding one-third in either direction.

(6) Platforms shall be made of metal or hard wood.

(7) The minimum fall in dead-weight machines shall be 16mm both ways for vibrating machines and 22mm one way for accelerating machines.

Balancing

102.-(1) Loose balancing material shall be contained in a balance box permanently fixed beneath one platform and its weight not exceeding one percent of the capacity of the machine.

(2) Balancing materials, other than loose materials, shall be in one piece and securely attached to the machine.

(3) Where a load of one-quarter the capacity is placed successively at the middle of the front and back of each platform and centrally over the knife edges on each side, the allowance for error shall not exceed half the allowed error.

Permissible errors

103.-(1) Permissible errors in the verification of dead-weight machines shall be the same as for platform machines of similar capacity.

(2) The load shall, in carrying out the tests for sensitiveness and error, be distributed over the platforms.

Position of stamping plug

104. The stamping plug on dead-weight machines shall be inserted in a conspicuous and easily accessible part of the beam of the machine.

PART XIII
PLATFORM MACHINES AND WEIGHBRIDGES

Test in situ

105. Weighbridges and dormant platform machines shall be verified and stamped in situ in addition to any preliminary test at the manufacturer's or user's premises.

Foundations

106. Weighbridges and dormant platform machines shall be permitted if the foundation or supporting base is sufficiently firm to be capable of carrying the maximum load without change of form or level.

Construction

107.-(1) The steelyard of a machine shall-

(a) be in a straight plane on its upper surface or edge; and

(b) not involve easily removable parts except the support for the counterpoises.

(2) A stop shall be affixed on the steelyard to prevent the sliding poise or poises from travelling behind the zero graduation.

(3) The steelyard or registering mechanism may be confined in a locked box or case, provided that the indications or graduations are visible.

Travel of steelyard

108.-(1) The minimum travel of the steelyard in platform machines shall be 10 millimeter both ways for vibrating machines, and 16 millimeter one way for accelerating machines.

(2) The minimum travel of the steelyard in weighbridges shall be 13 millimeter both ways for vibrating machines, and 19 millimeter one way for accelerating machines.

Counterpoises

109.-(1) Where a counterpoise is used in connection with a loose receptacle or frame it shall be of a shape distinct from all the other counterpoises.

(2) All loose counterpoises shall be identified with the machine by a number or other indelible mark and be marked with their equivalent weight in the form of "= 50kg".

Balancing mechanism

110.-(1) A weighbridge and platform machine shall be fitted with balancing mechanisms capable of being operated by means of a detachable key.

(2) The range of balance of a weighbridge and platform machine shall not exceed-

(a) one-half percent of the capacity of the platform machine, and not less than one-eighth percent each way; and
(b) one percent of the capacity of the weighbridge and not less than one-fourth percent each way.

Gravity balls

111. Where a gravity ball is provided, unless the ball is completely enclosed, it shall be adjustable by means of a mechanical appliance.

Self-indicating machines

112. The following provisions shall apply to weighbridges and platform machines fitted with dials-

(a) racks and pinions shall be made of material of high anti-friction factor;
(b) the registration mechanism and cylinders or tanks containing liquid (if any) shall be protected from dust and excessive variations of temperature;
(c) the graduation marks shall be clear and distinct and shall not-
    (i) exceed 8 millimeter in width on platform machines
    (ii) exceed 16 millimeter in width on

weighbridges;

(iii) be less than 32 millimeter apart, measured from centre to centre; and denominated subdivisions shall be of longer lines than minor graduations;

(d) the extremity of the indicator shall in no position be at the greater distance from the graduated surface of the dial than 45 millimeter, and shall be made to meet, but not obscure, the graduation marks.

Mode of testing

113.-(1) Each-

(a) numbered graduation, shall be tested; and

(b) minor graduations, may be tested.

(2) Each loose counterpoise shall be tested.

(3) Platform machine and weighbridge shall be tested to its maximum capacity.

(4) Where a sufficient standard weight is not available to test a machine to its full capacity, it may, where practicable, be loaded with suitable heavy material to within one third of its maximum capacity.

Test at quarter load

114. Half the allowance for error at maximum capacity shall not exceed where a load equal to one-quarter the maximum capacity is placed successively at the middle, near the ends and at the corners of the platform.

Relieving gear

115.-(1) Where a platform machine or weighbridge is fitted with a relieving gear the prescribed limits of error shall not exceed the limit when the machine is put steadily out of and into gear.

(2) The plate or platform shall be entirely disengaged from its bearings when the machine is in relief.

Permissible errors for weighbridge and platform machine

116. The permissible errors on the verification of weighbridges and platform machines shall be as specified in Table IV set out in the Third Schedule to these Regulations.

Position of stamping plug

117. (1)The stamping plug on:

(a) weighbridges and platform machines other than self-indicators shall be inserted in the shoulder or the nose-end of the steelyard; and

(b) self-indicating machines shall be inserted in the dial or in the shoulder.

(2) Loose counterpoises shall, after the completion of the test, be date-marked upon the lead in the adjusting hole.

PART XIV
CRANE MACHINES

Construction

118.-(1) A crane machine shall be constructed in compliance with the constructional requirements of a platform machine.

(2) The working parts of a crane machine shall be enclosed and protected from damp and dust.

Balancing

119. The balancing range or adjusting mechanism, where provided, shall not exceed two percent of the capacity of the machine.

Mode of testing

120.-(1) A crane machine shall be tested forward and backward to establish its full working capacity.

(2) Each numbered graduation of a crane machine shall be tested.

Permissible errors

121. The permissible errors on the verification of a crane machine shall be -

(a) below capacity of 1000 kilogram the same as for platform machines of the same capacity; and

(b) not less than 1000 kilogram the same as for weighbridges of the same capacity.

Position of stamping plug

122.-(1) The stamping plug on a crane machine shall be inserted in a conspicuous part of the steelyard or dial of the machine.

(2) A sealing mechanism for electronic crane machines shall be in such a manner that no intervention can be performed without breaking the seal

PART XV
AUTOMATIC MACHINES

Adjusting mechanism

123. The adjusting mechanism for automatic machine shall be secured in such a way that it cannot be tampered.

Mode of testing

124. Automatic machines shall be tested by the application of standard weights or measures.

Totalizing machines

125. Where an automatic machine has a totalizer, it shall be tested by passing the machine over ten minimum loads, ten

maximum loads, and ten loads of the mean between the minimum and maximum.

Permissible errors for automatic machine

126. The permissible errors on the verification of automatic machine shall be as specified in Table X set out in the Third Schedule to these Regulations.

Certification

127. An Inspector shall, after certifying an automatic machine

(a) affix a verification sticker at a conspicuous part of a machine; or
(b) issue a certificate of verification.

PART XVI
SELF-INDICATING WEIGHING INSTRUMENTS

Graduations

128. The graduation marks of self-indicating instruments shall-

(a) be clear and distinct;
(b) denominated subdivisions be of longer lines than minor graduations,
(c) not exceed 0.4 Millimeter in width on instruments for counter use and suspended weighers, and
(d) be of not less than 1.6 Millimeter of the minimum distance between graduations measured from centre to centre.

Pointer

129. The extremity of a pointer shall not exceed-

(a) 0.4 millimeter in width; and
(b) 4.5 millimeter from the chart

Value of graduation

130. The maximum value of the smallest subdivision on the chart in self-indicating instruments of a capacity not exceeding 75 kilograms shall not exceed the amount set out in the following table-

Capacity of Instrument	Maximum Value of smallest division
Under 1kg	10g
1kg and under 10kg	15g
10 kg and not exceeding 15kg	30g
Over 15 kg and not exceeding 30kg	60g
Over 30kg	110g

Mode of testing

131. A person:

(a) shall test all numbered graduations forwards and backwards; and
(b) may test intermediate graduations.

Permissible errors for self indicating instrument

132. The permissible errors on verification of self-indicating instruments shall be as specified in Table XI set out in the Third Schedule to these Regulations.

Position of stamping

133. The stamping plug on self-indicating instrument shall be placed at a conspicuous and essential part of the instrument, in addition to any seals which may be prescribed by the Commissioner.

PART XVII
VEHICLE TANKS

Construction and design

134. A tank shall be constructed in accordance with the provisions of these Regulations and-

(a) be of such shape, material, reinforcing elements and method of shaping chosen so that the tank is sufficiently unaffected by atmospheric agents and the liquids it contains and is practically not subject to distortion under any rated operating conditions;
(b) comply with other regulations concerning transport of dangerous liquids, safety at work, the construction of pressure vessels and protection of pressure vessels and protection against fire, quality of liquid transported and health;
(c) be pressure tested;
(d) be leak tested by using water at atmospheric pressure;
(e) be fitted with an approved device through or by means of which the liquid can be measured or calibrated in the manner prescribed by these Regulations;
(f) after being filled, show no traces of leakage or dampness at the joints;
(g) be of the reference height "H" which does not vary during filling by more than either of the following two values-
    (i) 2mm;
    (ii) H/1000; and
(h) be of the capacity of the compartment which does not change by more than 1/1000 of its measured

volume when the neighboring compartments are filled or emptied.

Quantity indicators, piping, gauges and valves

135. Any quantity indicator, gauge, piping and valve shall be of such strength, design, construction and material that they may reasonably be expected to withstand ordinary usage without the accuracy of the tank being impaired.

Complete delivery requirements

136. A person shall ensure that-

(a) delivery piping connected to a tank is of a design and construction that, when the vehicle on which it is mounted is standing on a level plane, complete delivery can be made from the tank or any compartments;

(b) the lower general matrix of the tank has a slope of at least two degrees with the vehicle on level ground to ensure complete drainage;

(c) where a tank is fitted with an approved meter, the delivery piping and manifold outlet is designed to preclude the liquid from being trapped in any empty compartment while delivering from the compartment which is full;

(d) the connection between the stop valve of the tank and pipe, other than the tank designed for a special purpose, is shortest and easily assembled detachable couplings;

(e) the fitted manhole is on the upper part of the tank and welded; and

(f) where the side walls of the manhole penetrate the tank shell, the formation of air pockets on the upper part of the shell is avoided by providing orifices or cutouts at the level of the upper internal general matrix.

Ventilation and filler openings

137.-(1) A person shall ensure that a tank-

(a) is ventilated to prevent the formation of air pockets on filling or retention of liquid on emptying in all positions of use;

(b) has a filler opening constructed in a manner and size which permits visual internal inspection;

(c) has anti-wave devices with orifices and reinforcing elements of a shape and does not hinder the filling, draining and checking the emptiness of the tank; and

(d) has no place of deadwood for adjusting the capacity to a given value or any other body which, when

changed or removed, could modify the capacity of the tank.

(2) A compartment or tank which is constructed to deliver a fixed quantity of liquid shall be numbered and indelibly marked in the following manner-

Capacity	*	Litres
* means numerical value of the capacity		

(3) Where a tank has more than one compartment, each compartment together with its outlet and valve shall be numbered.

Position of indicator

138. An indicator or other approved device shall be-

(a) provided for each compartment;
(b) centrally situated in respect to-
  (i) the longitudinal and diametrical axes in cylindrical tanks; and
  (ii) the longitudinal and major axes in elliptical tanks.

Design and sealing of quantity indicators

139. A person shall ensure that-

(a) the quantity indicator in a tank or compartment constructed to deliver a fixed quantity function within a manhole centrally situated on the top of a tank or compartment and be fixed rigidly to indicate the centre of the manhole.;
(b) the quantity indicator, by means of a plated or polished flat circular metal disc of at least 2.5 mm diameter, define the height to which the tank or compartment is to be filled in order to contain its marked capacity;
(c) an adjustable quantity indicator is constructed in a manner that can be sealed to prevent any change in its position without breaking the seal.

Gauges to be identified with compartments

140. Graduated gauges or other approved devices for the measurement of liquid in a tank or compartment shall be identified-

(a) with the tank or compartment to which they belong;
(b) by means of a number indelibly marked to them; and
(c) by means of a number corresponding to a number similarly marked on the tank or compartment.

Provision for expansion

141. A person shall ensure that indicators and gauges in a tank or compartment are placed or graduated in a manner, in

which when the tank or compartment is filled with the declared maximum quantity it is designed to contain, remain with not less than 2.5 percent of the capacity of the tank or compartment.

.

Method of testing

142.-(1) The method of testing shall be as follows–

(a) All tests for checking the accuracy of tanks compartments shall be made by means of meter or against official standard measures of capacity, with the tank or compartment in a level position and stop valve closed

(b) Where a standard measure which requires a fixed position is used, it shall be placed in a manner that the test medium has a free run into the tank compartment and there shall be no leakage at the hose leading from the measure;

(c) The shape of the tank shall be such that in a zone where the level of the contained liquid is gauged, a sensitivity of at least 2mm for 1/1000 of contained volume is attained.

(2) After testing a vehicle tank, a certificate of verification as set out in Form F of the first schedule to these regulations shall be issued together with a sticker and verification chart.

Charts of gauges

143. Where graduated gauge is used for indicating the liquid contents of compartment, an inspector shall-

(a) make and retain for future reference an accurate chart of the quantity marks on each such gauge; and

(b) number the chart to reflect a similar number marked on the gauge.

Emergency valves

144. Where emergency valve is provided for closing the discharge outlets from a tank or compartment, the verification shall be made with the emergency valve open.

Permissible error

145. The permitted error in excess or deficiency on a tank or compartment shall be as follows-

(a) error on verification shall be ± 0.2 percent of the nominal volume; and

(b) error on re-verification shall be ± 0.5 percent of measured volume.

PART XVIII
LIQUID MEASURING PUMPS

Prohibition of certain types

146. A liquid measuring pump for the sale of liquids of low viscosity in the presence of the purchaser shall not be permitted unless it is-

(a) provided with a measuring chamber or chambers constructed to permit a clear and unobstructed view by the purchaser of the contents of such measuring chamber or chambers;
(b) constructed to deliver measured quantities at one outlet; and
(c) provided with an individual sales indicator.

Test in situ

147. A liquid measuring pump of fixed type shall be-

(a) plumped;
(b) securely fixed on a level base and the longitudinal axis of the measuring chamber;
(c) verified; and
(d) sealed and affixed with a verification sticker.

Denomination

148.-1) The minimum delivery of a liquid measuring pump shall be clearly and indelibly marked on the outside part of the body.

(2) Where the unit of measurement is boldly marked on the dial, an indication of quantity on the dial of individual sales indicator may be shown by figures.

Prohibition of certain markings

149. A liquid measuring pump which bears any notice, statement or mark which might be mistaken with a verification mark shall not be permitted.

Sales indicators

150. A manufacturer shall ensure that an individual sales indicator is-

(a) capable of being readily re-set to zero; and
(b) advanced by proper operation of the instrument.
(c) a counting or totalizing device is arranged to avoid confusion with the individual sales indicator.

Marking of graduations

151. A graduated scale of quantities shall be denominated in numerical sequence in one direction.

Discharge signals

152. A person shall not use:

(a) audible or any other signal of discharge which can be operated before the movement of the individual

sales indicator shall not be permitted; or

(b) a flexible discharge hose with a length exceeding four meters.

Swing arms, flexible pipes and nozzles

153. A manufacturer shall ensure that a swing arm or other rigid form of extension pipe is constructed in a manner that:

(a) empties itself completely through the delivery outlet;

(b) remains permanently filled up to its connection to the discharge pipe or hose;

(c) a flexible hose with an arm or pipe which empties itself on delivery, is arranged as to provide for complete drainage of the liquid; and

(d) a nozzle capable of trapping any portion of the liquid being delivered is not attached to the discharged hose when opened.

Sight glasses

154. A measuring instrument or measuring system may be provided with sight glasses, observation windows or other means approved by the Commissioner for showing clearly that any measuring chamber is properly charged and discharged.

Test under working conditions

155. An inspector shall test a liquid measuring pump and the liquid fuel or oil which the instrument is intended to deliver, under practical working conditions.

Testing a liquid measuring pump

156.-(1) Any packing gland and joint shall, before testing any liquid measuring pump for accuracy, be tested for leakage over a reasonable period with the liquid which the instrument is intended to deliver.

(2) A liquid shall, before testing any liquid Measuring pump or System fitted with a flexible discharge hose, be passed through the instrument to wet the hose.

Permissible errors for liquid measuring pump

157. An inspector shall ensure that:

(a) the permissible errors on the verification of liquid measuring pump shall be as specified in Table XII set out in the Third Schedule;

(b) a speed of operation shall be uniform in a single delivery;

(c) specified error shall not be exceeded at optimal speed of operation.

Test by the owner or user

158. An owner or user of liquid measuring pump shall have in his possession a verified check measure whose capacity

is not less than 20 litres used to ascertain the accuracy of his pumps every day before commencing business of the respective day.

Mode of Filling Measures of Capacity

159. An owner or user of a liquid measuring pump shall use measure of capacity of 20 litres having a portion made of metal or other suitable material sufficient to bear the stamp of verification extending from the lower end, and having the upper portion made wholly or partially of glass or other transparent material so that the level of the surface of the contents may be clearly seen, and with the level line distinctly marked upon the transparent portion.

Provision of seals and sticker

160.-(1) Every stop or other adjustable part of liquid measuring pump affecting or likely to affect the quantity delivered shall be protected in a manner as may be directed by the Commissioner.

(2) A stamp of verification shall be placed on each protective device.

(3) An inspector shall seal the dispensing pump or place a verification sticker on both sides of the readings of a fuel dispensing pump.

PART XIX
WEIGHTS, MEASURES AND INSTRUMENTS OF THE METRIC SYSTEM

Permissible errors for metric weights and measures

161. The permissible errors in metric weights and measures shall be as specified in Tables I, II, III and XIII as set out in the Third Schedule to these Regulations.

Marking

162. Metric Carat Weights shall be marked in metric denominations as indicated in Table XIII as set out in the Third Schedule to these regulations.

Weights

163.-(1) Every iron metric weight and loose counterpoise shall be of hexagonal shape.

(2) Metric weights other than iron weights and loose counterpoises shall be cylindrical, hexagonal, flat or of wire.

(3) The height of the cylindrical portion in cylindrical weights shall be equal to the diameter.

(4) An iron weight below fifty gramme shall not be permitted.

PART XX
INSPECTION

Inspection on trade premises

164. An inspector shall, for the purpose of inspecting all weights and measures in use for trade-

(a) conduct inspection on trade premises at frequent intervals, and

(b) fill the prescribed Form I set out in First Schedule to these Regulations.

Obliteration of stamp

165.-(1) An inspector shall, upon inspection of weight, measure or instrument, obliterate the stamp-

(a) on any weight, measure or instrument which cannot be stamped or re-stamped or comply with the requirements of the Act or these Regulations;

(b) on any repaired weight, measure or instrument;

(c) on any weight, if the error in deficiency is more than half that allowed in excess on verification, or if the error in excess is more than that allowed on verification;

(d) on a measure of length if the error in deficiency or excess exceeds four times the amount allowed on verification;

(e) on a measure of capacity other than an apothecaries measure, if the error in deficiency is more than half the allowed in excess on verification, or if the error in excess is more than that allowed on verification;

(f) on an apothecaries measure if the error is greater than that allowed on verification;

(g) on a weighing instrument if the error exceeds twice or if the deficiency in sensitiveness exceeds three times that allowed on verification;

(h) on a liquid measuring pump if the error in deficiency is more than half that allowed in excess on verification, or if the error in excess is more than twice that allowed on verification.

(2) An inspector may, upon inspection of liquid measuring pump, obliterate the stamp-

(a) on any liquid measuring pump of fixed type which has been erected or re-erected since it was last stamped; and

(b) on any liquid measuring pump to which any alteration or addition has been made or which has been adjusted or repaired in any manner which might affect its accuracy since it was last stamped.

PART XXI
REPAIR OR MANUFACTURE OF MEASURING INSTRUMENT OR MEASURING SYSTEMS

Repairer and manufacturer to be licenced,

166. Any person who intends to carry on the business of installing, servicing, overhauling or repairing any instrument shall apply for a licence to the Commissioner.

Types of licences and forms

167.-(1) A class "A" licence shall be in the form prescribed in Form No. 1 of the Fourth Schedule to these Regulations and shall be granted to a person who is capable of working on all types of measuring instrument or measuring systems.

(2) A class "B" licence shall be in the form prescribed in Form No. 2 of the Fourth Schedule to these Regulations and shall be granted to a person who is capable of working on four to six types of specified measuring instrument or measuring systems.

(3) A class "C" licence shall be in the form prescribed in Form No. 3 of the Fourth Schedule to these Regulations and shall be granted to a person who is capable of working on two to three types of specified measuring instrument or measuring systems.

(4) A class "D" licence shall be in the form prescribed in Form No.4 of the Fourth Schedule to these regulations and shall be granted to a person who is capable of working on at least two types of measuring instrument or measuring systems'

(5) A class "E" " licence shall be in the form prescribed in Form No.5 of the Fourth Schedule to these Regulations and shall be granted to a person who-

(a) is capable of manufacturing at least one type of measuring instrument or measuring systems;
(b) submit the pattern together with technical drawings of the measuring instrument or measuring systems applied for to the Commissioner for approval.

Place of repair of instruments or system

168. Any instrument may be serviced, overhauled or repaired at:

(a) the premises of the owner of measuring instrument or measuring systems;
(b) a place of business maintained by the licencee; or
(c) any other authorized premises.

Licencee to issue form

169.-(1) Where a licencee of Class A, B, C and D has

installed, serviced, overhauled or repaired any instrument, he shall fill in Form "D" prescribed in the First Schedule to these Regulations and issue to the owner of that instrument and an inspector.

(2) Any person who contravenes sub-regulation (1) commits an offence and on conviction shall be liable to a penalty as provided for in the Act

Licensee to maintain register

170.-(1) A licensee of Class A, B, C and D shall maintain a register in which shall be entered the following particulars-

(a) the type of measuring instrument or measuring systems and the name of the owner;
(b) the nature of defect in the measuring instrument or measuring systems;
(c) the nature of the work done by the licensee on the measuring instrument or measuring systems;
(d) the date on which the licensee attended to the measuring instrument or measuring systems; and
(e) any other particulars as may be determined by the Commissioner.

(2)Any person who contravenes sub-regulation (1) commits an offence and upon conviction shall be liable to a penalty as provided for in the Act.

Duty to submit documents, measuring instrument or measuring system

171.-(1) A licensee shall cause every measuring instrument or measuring systems manufactured, installed, overhauled, serviced or repaired by him to be examined by an inspector for the purposes of verification, stamping or certifying before the instrument or system is put into use.

(2) For the purposes of the examination of measuring instrument or measuring systems under this Regulation, the licensee shall furnish an inspector with documents and register maintained pursuant to these Regulations and such other information as the inspector may require.

(3) The authorized person shall seal or re-seal measuring instrument or measuring systems by means of a sealing plier constructed to impress upon every seal or sealing device such mark and number as the inspector may allot to him for the purpose of identification.

(4) A licencee of class "D" shall forward to the inspector a notice in writing in Form 'D' set out in the First Schedule to these Regulations reporting every detail of such sealing or re sealing.

(5) Any user or repairer of the instrument shall, within

twenty four hours of such sealing or re-sealing, send to an inspector a request in writing to verify the measuring instrument or measuring systems.

(6) A person who contravenes this regulation commits an offence and shall on conviction, be liable to a penalty as provided for in the Act.

Verification of test weights and measures

172.-(1) Every test or standard weight or measures used by a licencee shall be submitted to an inspector not less than once every year for the purposes of verification.

(2) A licencee shall possess stamped testing measures of a pattern approved by an inspector and shall test each measuring instrument or measuring systems for accuracy before sealing or re-sealing.

(3) A person who contravenes this regulation commits an offence and shall, on conviction be liable to a penalty as provided for in the Act.

Charges for verifications and adjusting fees

173. The verification, prepackage testing, other charges and adjusting fees shall be as stipulated in the Fifth and Sixth Schedules to these Regulations respectively.

PART XXII
PRE-PACKED GOODS INSPECTIONS, TESTING AND CERTIFICATION FEES

Mode of labeling

174. Goods produced or manufactured locally, imported or otherwise shall be packed according to the requirements of the Act.

Powers to test and certify

175.-(1) Goods produced, manufactured or packed locally or otherwise shall be subject to inspections, testing and certification by the inspector at least once in every year.

(2) Every imported consignment shall be subject to inspection, testing and certification by an inspector.

(3) After identification of imported goods or consignment, an inspector shall seal or mark the container with a seal prior to inspection, testing and certification of such imported goods or consignment at the premises of the importer or any other place proposed by inspector, and fill in a Pre-packed Inspection Form Prescribed under Table IV of Eleventh Schedule to these Regulations.

Fees and certification

176. Where after such inspection, testing and certification the goods are found to be within prescribed limit of

error or standards, an inspector shall charge fees as prescribed in the Eighth Schedule to these Regulation.

Certificate of conformity

177. The Certificate of Conformity under these Regulations shall be issued as prescribed in the Ninth Schedule to these Regulations.

Rejection note

178.-(1) Where after inspections and testing the goods are found not to comply with the requirements prescribed in Part XXIII of these Regulations, a Rejection Note as prescribed in Tenth Schedule to these Regulations, shall be issued.

(2) Where a rejection note has been issued under sub-regulation (1), an inspector shall charge rejection fees double of the fees prescribed in Eighth Schedule to these Regulations.

PART XXIII
PACKED GOODS

Metrological requirements for packages

179. Any packed goods ready for sale shall have the following requirements, namely-

(a) the average net content conveyed by any lot of packed goods available for inspection shall equal or exceed the net content as declared on the package;
(b) the declaration of net content shall accurately reveal the quantity meant to be in the package.

Identity of product

180. The package of a product shall be marked-

(a) with what is inside and shall contain what is marked;
(b) in the common or usual name of the product; or
(c) in the generic name or other appropriate descriptive name.

Label

181. The label of a prepacked product shall–

(a) specify conspicuously the name and place of business of the manufacturer, packer, distributor or importer;
(b) where the product is not manufactured or packed by the person whose name appears on the label, the name on the label shall reveal the connection that name has with the product;
(c) indicate the month and year in which the goods were manufactured or pre-packed.

Declared net quantity of

182.-(1) A pre-packed product shall bear a declaration of

packed product

the net quantity of the product on the principal panel.

(2) The net quantity shall be expressed in terms of the largest whole unit of mass, volume, length, or a combination of such mass, volume, length and area as specified in Tables IA, and IB in Eleventh Schedule in these Regulations.

(3) Net quantity of a product packed in a container designed to deliver the product under pressure, shall be expressed in kilogram, gram or milligram that will be expelled when the instruction of use is followed.

(4) A statement of quantity in terms of count shall be expressed in whole numbers.

Presentatio of information

183.-(1) Statement of quantity less than whole numbers may contain decimal fractions to no more than three places, except where-

(a) quantities below 100g, 100ml, 100cm² or 100cm may be shown to two figures;
(b) any final zero to the right of decimal marks need not be expressed;
(c) if the quantity is less than one, it shall be shown in decimal system with zero preceding the decimal mark but statements such as "half kilogram" are not permitted and the expiry date.

(2) Statement of net quantity shall-

(a) appear in easily legible bold face type or print that contrasts conspicuously with the background and with other information on the package;
(b) be in letters and numerals in minimum type size established in relationship to either the area of the principal display panel of the package or the package or the contents as specified in Tables IIA and IIB in Eleventh Schedule in these Regulations.

Misleading practices

184.-(1) A package shall be filled in such a manner that a purchaser is not misled with respect to the quantity of the product it contains.

(2) A package shall be manufactured, constructed or displayed in such a manner that a purchaser is not misled with respect to the quantity of product contained.

Selection of samples of packages

185.-(1) The sample size used for determining the net quantity of any goods in a package shall be such as specified in column 2 of Table IIIA in Eleventh Schedule in these Regulations.

(2) Where for the determination of net quantity of any

goods contained in a package, it is necessary to take samples of packages stored by the manufacturer or packer in warehouse, godown or any other place, the sample shall be selected at random, from every batch of packages and shall be picked out from the top, bottom, centre, right, left, front and rear of the stock for adequate representation of packages in a batch.

(3) Where for the determination of net quantity of any goods contained in a package, it is necessary to take samples from the place where the package is filled, the sample shall be selected from among packages which have already been filled.

Approval of batches

186. A batch of packages shall be approved for sale if after testing it is found that–

(a) The statistical average of the net quantity contained in a sample package is equal to or more than, the quantity declared on the packages as shown in the formula below:

$$\bar{x} \geq Qn - KS$$

Where: $\bar{x}$ - is the statistical average of the drawn sample;

Qn – is the quantity declared on the package;

K - is the normal distribution factor given in column 2 of table IIIB in Eleventh Schedule in these Regulations with corresponding sample size;

S - is the standard deviation of the sample.

and if X is the measured value of the actual content of ith package and n is the number of packages in the sample, then-

(i) the average, $\bar{x}$, of the measured values in the sample is obtained by the following calculations-

$$\bar{x} = \left(\sum_{i=1}^{i=n} x_i\right)/n$$

(ii) the estimated value of the standard deviation, s, is obtained by the following formula-

$$s = \sqrt{\left(\sum x_i - \bar{x}\right)^2 / (n-1)}$$

(b) the number of packages showing an error, in deficiency greater than permissible error is not more than the corresponding number specified in column 3 of table **IIIB in** Eleventh Schedule in these Regulations;

(c) the extent of error in deficiency in none of such sample packages exceeds twice the maximum permissible error;

(d) Each package in batch bears a label affixed thereon bearing the declaration required to be made as under these regulations.

Action to be taken upon completion of examination of packages

187.-(1) An Inspector shall enter in the form set out in Table IV in Eleventh Schedule in these Regulations the results of the test carried out by him and shall obtain, on the said form, the signature of the manufacturer or of the packer, or his authorised agent and in the absence of both, or on refusal to affix such signature of a competent witness, a copy of the sheet containing result shall be given to the manufacturer or packer, as the case may be.

(2) The Inspector shall seize in accordance with the provision of the Act, the packages drawn by him as samples and shall take adequate steps for the safe custody of the seized packages until they are produced in the appropriate court as evidence.

(3) If, on the determination of quantity contained in a sample packages, the Inspector finds that the quantity contained in a package agrees with the statement of quantity contained made on the package or label but a package is deceptive, he shall require the manufacturer or packer as the case may be, to re-pack and re-label the package and in the event of omission or failure on the part of the manufacturer or packer, to so re-pack and re-label the deceptive package, in accordance to the required standards it shall be an offence under these Regulations.

Penalty

188. Any person who contravenes the provision of this Part, or tampers with, or obliterates or alters any statement made on any package commits an offence and is liable on conviction to a penalty prescribed under the Act.

Power to test and certify

189.-(1) Goods produced, manufactured or packed locally or otherwise shall be subject to inspections, testing and certification by the Inspector at least once in every year.

(2) Every imported consignment shall be subject to inspection, testing and certification by Inspector.

(3) After Identification of imported goods or consignment, shall seal or mark the container with Government seal prior to inspection, testing and certification of such imported goods or consignment at the premised of the importer or any other place proposed by Inspector.

PART XXIV
LICENCING PROVISIONS

Application for licence

190.-(1) Any person who intends to carry on any business under these Regulations shall apply to the Commissioner for a licence.

(2) An application for a licence under sub-regulation (1) shall be in prescribed Form G set out in the First Schedule to these Regulations.

Duration, renewal and fees

191.-(1) Every licence granted under these Regulations shall expire on 31st December of each year.

(2) Notwithstanding the provisions of sub-regulation (1), the Commissioner may determine the time for expiry of certain licences

(3) Within forty five days before the expiry date of the existing licence, the licensee intending to renew the licence shall make a formal application for renewal of his licence to the Commissioner in a prescribed form set out in Form G of First Schedule to these Regulations.

(4) There shall be paid in respect of new licence or renewal of licence, a fee corresponding to a class of instrument as shown in the Seventh Schedule to these Regulations.

Display of licence

192.-(1) A licensee shall display his licence at a conspicuous place at his place of business.

(2) A person who contravenes sub-regulation (1) commits an offence and upon conviction shall be liable to the penalty as provided for in the Act

Revocation of licence

193.-(1) The Commissioner may at any time revoke any licence if the licensee fails to comply with any condition imposed on him by these Regulations.

(2) Subject to the provision of sub-regulation (1), the Commissioner shall require the licensee to show cause prior to the revocation.

Appeal to the Minister

194.-(1) A person aggrieved by the refusal of the Commissioner to grant a licence or by the cancellation of a licence may within fourteen days, appeal to the Minister against the refusal or cancellation.

(2) An appeal to the Minister shall-

(a) be in writing;

(b) state the grounds of appeal in a chronological order;

and

(c) be signed by the appellant

(3) A decision by the Minister on the appeal shall be made within thirty days from the date of receipt of an appeal.

(4) The Minister may confirm, vary, modify or rescind the decision by the Commissioner or may give any direction as he may deem appropriate

(5)The appellant may at any time prior the Minister's decision, lodge a notice that he does not intend to proceed with an appeal.

(6) Upon receipt of the notice, the Minister shall mark the appeal withdrawn.

Offence in relation to installment

195.-(1) A person shall, for gain or otherwise, not install, service, overhaul or conduct any repair on any measuring instrument or measuring system except with a licence issued by the Commissioner in accordance with the Act.

(2) A person who contravenes sub-regulation (1) commits an offence and upon conviction shall be liable to the penalty as provided for in the Act.

PART XXV
GENERAL PROVISIONS

General Offence

196. Any person who contravenes the provisions of these Regulations commits an offence and shall on conviction be liable to the penalty provided for in the Act.

Compounding of offences

197. Subject to section 46 of the Act, where the Commissioner is satisfied that any person has committed an offence under the Act and its Regulations he may compound such offence by filling in Form H prescribed in the First Schedule to these Regulations.

Revocation of GN no 229 of 2016 and GN No. 535 of 1998

198. The Weights and Measures (General) Regulations, 2016 and the Weights and Measures (Packed Goods) Regulations, 1998 are hereby revoked.

Savings

199. Notwithstanding Regulation 198, anything done or any action taken or purported to have been done or taken under the revoked Regulations shall be treated as if they have been done or taken under these Regulations.

FIRST SCHEDULE

FORMS

FORM A

FORM OF CERTIFICATE OF VERIFICATION OF SECONDARY STANDARDS

(Made under regulation 3(4))

I HEREBY CERTIFY that the several secondary standards numbered viz. one each of .....have been this day duly verified and found to comply with the Act.

……..
Number(s)

.....
..……
Warden of Secondary Standards Commissioner for Weights and Measures

Dated this ……..... day of .....

FORM B

FORM OF CERTIFICATE OF VERIFICATION OF WORKING STANDARDS

[Made under regulation 4(2)]

I HEREBY CERTIFY that the several working standards viz. ..... have been this day duly compared by me and found to agree with the secondary standards.

Dated this ..... day of .....

.....
Commissioner for Weights and Measures

FORM C

CERTIFICATE OF PATTERN APPROVAL

(Made under regulation 11(2))

I HEREBY CERTIFY that the under mentioned pattern of instrument has been duly approved for use for trade.

Particulars of the approved pattern;

……

……

……

…….

……

Commissioner for Weights and Measures

FORM D

FORM TO BE USED BY A LICENCEE AFTER SEALING OR RE-SEALING OF AN INSTRUMENT OR SYSTEM

(Made under regulations 12(d),169(1) and 171(4))

Name of Licencee .....

I hereby certify that I have Erected/Installed/Overhauled/Serviced/Repaired the following instrument(s) or system(s)–

1. ……..
2. ……..
3. ……..
4. ……..

Owned by …….

Location ……...

Date of sealing .....

Signature .....

Licencee.

To be submitted to the Commissioner for Weights and Measures within twenty four hours after completion of the work.

FORM E

FORM OF CERTIFICATE FOR THE USE, OR POSSESSION FOR USE IN TRADE, OF WEIGHTS, MEASURES OR WEIGHING OR MEASURING INSTRUMENT OR SYSTEMS NOT STAMPED WITH THE PRESCRIBED VERIFICATION MARK

(Made under regulation (16))

This is to certify that ..... has been granted permission under section 35(2) of the Weights and Measures Act, to use or have in his possession for use in trade, the under-mentioned weight(s), measure(s), weighing or Measuring Instrument or System(s), which is/are not stamped with the prescribed verification mark.

Make and type of weight(s) or instrument(s).....
This certificate is valid until .....and is valid in the following areas of Mainland Tanzania.....

Conditions of issue .....

….....
Commissioner for Weights and Measures

FORM F

CERTIFICATE OF VERIFICATION FOR VEHICLE TANKS

(Made under regulation 142(2))

I certify that the under mentioned Vehicle Tank submitted to me by _____ of _____ has this day been duly verified and has been stamped, having been found fit for use for trade/or has been rejected/or adjusted as indicated hereunder.

Specifications of Vehicle Tank

_____

GN NO. 288 (contd)

_____
___
_____
___
_____
___

Dated this _____ day of _____.

_____
Commissioner for Weights and Measures

FORM G

APPLICATION FOR LICENCE/RENEWAL

(Made under Regulation 190(2), 191(3))

A. APPLICANT'S PARTICULARS

1. Applicant's name…….
   Nationality…….
   Permit……...
2. Address…..……Region……
   ……..District……..Tow
   n/Village……..……...……..Telephone……
   ……..Fax…….……Email……
   ……..…..
3. Company registration number……...
4. Number of previous licences (if any) …….
5. (a) Type of licence being applied for…….…….
   (b) Type of instruments which the applicant proposes to work on……
   …….....

B. APPLICANT'S QUALIFICATIONS

1. Name
   ……
   Qualification and experience……
2. Name
   ……
   Qualification and experience…….
3. Name
   ……
   Qualification and experience……

C. EQUIPMENT/TOOLS OR FACILITIES

(List tools, machinery or other resources necessary to carry out the work for the applied licence)

……..……
……..……

D. APPLICATION/RENEWAL FEES

Tshs ……..……Paid vide Receipt No…….dated……..

Signature of applicant…… Date……

FOR OFFICIAL USE ONLY

(a) Regional Manager's Recommendation
……
……
……
Name of Regional Manager……
Signature…….. Date……..

(b) Technical Director's Recommendation
……
……
……
Name…… Signature……..
Date…….

(c) Decision by the Commissioner
……
……
Signature……..
Date……

(d) Licensing/Renewal Fees of Tshs……..Paid by Receipt No……..Dated……

(e) Number of Licence granted…….

FORM H

COMPOUNDING FORM

(Made under regulation 197)

PARTICULARS OF THE OFFENDER:
1. Name…… ……..
2. Age…… ……
3. Tribe…… ……...
4. Nationality…… ……..
5. Religion…… ……..……

6. Occupation……..……
7. Residence/Address……
8. Mobile No. ……

OFFENCES

SN.	Offence(s)	Section/ Regulation	Previous record of offence (if any)

I, ……..……..... agree/disagree with count(s) and the penalty stated above and undertake/not undetake to comply with the order of the compounding officer stipulated herein-under within …… days from…… or as shall be ordered by the compounding officer.

…….....
(Offender's signature)

I,…….……,Compounding officer as per conferred powers upon me by the Commissioner for Weights and Measures, as provided for under section 46 (4) of the Weights and Measures Act, Cap 340, hereby do compound offence(s) as stipulated above and order; Ms/Mr/Miss……to pay a total sum of Tshs…….(amount in words). ……...……. and further, I state that I have informed the offender of his/her rights of appeal as per section 46 (5) of the said Act.

_____ ……...
Compounding officer's Signature Official Rubber Stamp

ADDITIONAL ORDER(S) (IF ANY)

I,……,Compounding officer do hereby order/warn you Mr./Mrs/Miss……as follows;
……
……
……
……

should you fail to comply with the order/warning stated hereinabove within …….. days the Commissioner shall take all necessary steps against you to recover.

…… ……

(Compounding officer's signature) **Offender's signature**

Date…… Date……

FOR OFFICIAL USE ONLY
A total sum of Tshs…….(amount in words)……..…… have been received as per WMA receipt No…….of (date)……a copy of which is annexed hereto. ……..…… (Receiving officer's signature)

FORM I

INSPECTION FORM

(Made under regulation 164)

PARTICULARS :

1. Name of Company:……
2. Place: ……
3. Business: ……
4. Address: ……
5. Name of Person Responsible……
6. Occupation……
7. Mobile No. ……

OBSERVATIONS AND FINDINGS:

……
……
……

I, ……..……..... agree with observations and findings stated above.

…….....
(Owner/user/possessor's signature)

<u>ORDER/</u>;

I ……
……
……
……
……
……
……

…… ……
Inspector's signature
Owner/user/possessor's signature
Date…… Date ……

SECOND SCHEDULE

(Made under regulation 21(3) and (4))

PART A

SHAPE OF WEIGHTS WITH LESS THAN 1 g

Nominal value (mg)	Polygonal sheets	wires		
5, 50, 500	Pentagon	Pentagon	or	5 segments
2, 20, 200	Square	Square		2 segments
1, 10, 100, 1,000	Triangle	Triangle		1 segment

GN NO. 288 (contd)

PART B
DIFFERENT SHAPES OF WEIGHTS

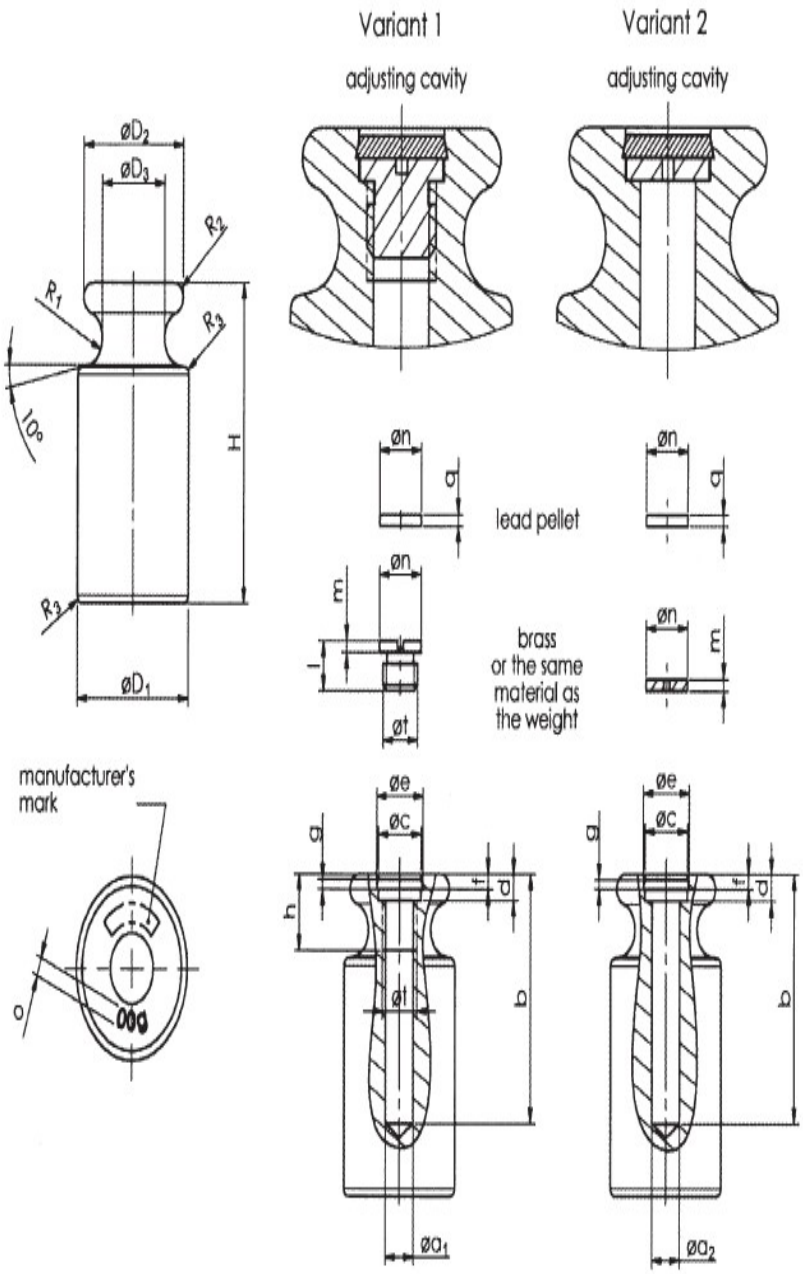

THIRD SCHEDULE

(Made under regulation 22 and 161)

TABLE I

A: WEIGHTS FOR USE WITH WEIGHING INSTRUMENTS OF ACCURACY CLASS I

Nominal Value (kg)	Maximum Permisible Error (mg)	Nominal Value (g)	Maximum Permisible Error (mg)	Nominal Value (mg)	Maximum Permisible Error (mg)
5000	25000	500	2.5	500	0.08
2000	10000	200	1	200	0.06
1000	5000	100	0.5	100	0.05
500	2500	50	0.3	50	0.04
200	1000	20	0.25	20	0.03
100	500	10	0.2	10	0.025
50	250	5	0.16	5	0.02
20	100	2	0.12	2	0.02
10	50	1	0.1	1	0.02
5	25				
2	10				
1	5				

B: WEIGHTS FOR USE WITH WEIGHING INSTRUMENTS OF ACCURACY CLASS II

Nominal Value (kg)	Maximum Permisible Error (mg)	Nominal Value (g)	Maximum Permisible Error (mg)	Nominal Value (mg)	Maximum Permisible Error (mg)
5000	80000	500	8	500	0.25
2000	30000	200	3	200	0.2
1000	16000	100	1.6	100	0.16
500	8000	50	1	50	0.12
200	3000	20	0.8	20	0.1
100	1600	10	0.6	10	0.08
50	800	5	0.5	5	0.06
20	300	2	0.4	2	0.06
10	160	1	0.3	1	0.06
5	80				
2	30				
1	16				

C: WEIGHTS FOR USE WITH WEIGHING INSTRUMENTS OF ACCURACY CLASS III

Nominal	Maximum	Nominal	Maximum	Nominal	Maximum

GN NO. 288 (contd)

Value (kg)	Permisible Error (mg)	Value (g)	Permisible Error (mg)	Value (mg)	Permisible Error (mg)
5000	250000	500	25	500	0.8
2000	100000	200	10	200	0.6
1000	50000	100	5	100	0.5
500	25000	50	3	50	0.4
200	10000	20	2.5	20	0.3
100	5000	10	2	10	0.25
50	2500	5	1.6	5	0.2
20	1000	2	1.2	2	0.2
10	500	1	1	1	0.2
5	250				
2	100				
1	50				

D: WEIGHTS FOR USE WITH WEIGHING INSTRUMENTS OF ACCURACY CLASS IIII

Nominal Value (kg)	Maximum Permisible Error (mg)	Nominal Value (g)	Maximum Permisible Error (mg)
5000	2500000	500	250
2000	1000000	200	100
1000	500000	100	50
500	250000	50	30
200	100000	20	25
100	50000	10	20
50	25000	5	16
20	10000	2	12
10	5000	1	10
5	2500		
2	1000		
1	500		

TABLE II

(Made under regulations 27 and 161)
MEASURES OF LENGTH

Denomination (m)	Limits of Error	
	End Measurement (+ or -) mm	Line Measurement (+ or -) mm
0.5	1	0.5
1	1	0.7
1.5	2	1
2	2	1
3	2	2
4	-	2
5	-	2
10	-	4
15	-	6
20	-	8
25	-	10
30	-	11
50	-	18
60	-	22
100	-	36

TABLE III
(Made under regulations 43 and 161)
MEASURES OF CAPACITY

Capacity of measure	Limit of Error (+ or -)
50 ml	2
100 ml	3
200 ml	5
250 ml	5
500 ml	10
1 L	10
2 L	20
5 L	50
10 L	50
20 L or More	0.5 percent

TABLE IV

(Made under regulations 53(b) and 116)

PLATFORM MACHINES, DEAD-WEIGHT MACHINES AND WEIGHBRIDGES

Capacity of Instrument	Vibrating machines		Accelerating machines
	Sensitiveness when fully loaded	Greatest error when loaded	Greatest error when loaded
50 kg	15 g	30 g	30 g
100 kg	20 g	50 g	50 g
150 kg	30 g	60 g	60 g
200 kg	40 g	70 g	70 g
250 kg	45 g	80 g	80 g
300 kg	50 g	90 g	90 g
500 kg	70 g	120 g	120 g
1000 kg	100 g	200 g	200 g
1500 kg	120 g	250 g	250 g
2000 kg	150 g	300 g	300 g
5 tons	1500 g	2000 g	2000 g
10 tons	2000 g	3000 g	3000 g
20 tons	3000 g	4000 g	4000 g
25 tons	3500 g	5000 g	5000 g
30 tons	3500 g	5500 g	5500 g
40 tons	4000 g	7000 g	7000 g
50 tons	5000 g	8000 g	8000 g
80 tons	7000 g	9000 g	9000 g
100 tons	8000 g	10000 g	10000 g

TABLE V

(Made under regulations 53(b) and 72(1))

Maximum Permissible error on initial verification for Electronic Measuring Instrument or Systems

Maximum permissible errors	For loads, *m,* expressed in verification scale intervals, e			
	CLASS I	CLASS II	CLASS III	CLASS IIII
± 0.5 *e*	$0 \leq m \leq 50\ 000$	$0 \leq m \leq 5\ 000$	$0 \leq m \leq 500$	$0 \leq m \leq 50$
± 1.0 *e*	$50\ 000 < m \leq 200\ 000$	$5\ 000 < m \leq 20\ 000$	$500 < m \leq 2\ 000$	$50 < m \leq 200$
± 1.5 *e*	$200\ 000 < m$	$20\ 000 < m \leq 100\ 000$	$2\ 000 < m \leq 10\ 000$	$200 < m \leq 1\ 000$

TABLE VI

(Made under regulations 53(b) and 74(1)(a) and 79)

BEAM SCALES

Class A

Capacity of Instrument	Sensitiveness when fully loaded (mg)	Greatest error allowed when Fully loaded (mg)
2 g	0.02	0.04
5 g	0.05	0.10
10 g	0.10	0.20
20 g	0.20	0.40
50 g	0.50	1
100 g	1	2
200 g	2	4
500 g	5	10
1 kg	10	20
2 kg	20	40
5 kg	30	60
10 kg	50	100
20 kg	100	200
50 kg	200	400

TABLE VII

(Made under regulations 53(b) and 74(1)(b) and 79)

BEAM SCALES

Class B		
Capacity of Instrument	Sensitiveness when fully loaded	Greatest error allowed when Fully loaded
2 g	1 mg	2 mg
5 g	2 mg	4 mg
10 g	3 mg	6 mg
20 g	5 mg	10 mg
50 g	10 mg	20 mg
100 g	20 mg	40 mg
200 g	30 mg	60 mg
500 g	50 mg	100 mg
1 kg	100 mg	200 mg
2 kg	200 mg	400 mg
5 kg	300 mg	600 mg
10 kg	500 mg	1 g
20 kg	1 g	2g
50 kg	2 g	4 g
100 kg	5 g	10 g
200 kg	10 g	20 g

TABLE VIII

(Made under regulations 53(b) and 74(1) (c) and 79)

BEAM SCALES

Class C		
Capacity of Instrument	Sensitiveness when fully loaded	Greatest error allowed when Fully loaded
100 g	100 mg	200 mg
500 g	500 mg	1 g
1 kg	1 g	2 g
5 kg	3 g	6 g
10 kg	5 g	10 g
20 kg	10 g	20 g
50 kg	15 g	30 g
100 kg	25 g	50 g
200 kg	50 g	100 g
500 kg	100 g	200 g
1000 kg	150 g	300 g

TABLE IX

(Made under regulations 53(b) and 88)

COUNTER MACHINES

Capacity of Instrument	Sensitiveness when fully loaded (g)	Greatest error allowed when Fully loaded (g)
500 g	1.5	2.2
1 kg	2.0	3.0
2 kg	3.0	4.5
3 kg	4.0	6.0
5 kg	6.0	9.0
10 kg	7.0	10.5
15 kg	8.0	12.0
20 kg	9.0	13.5
25 kg	10.0	15.0
30 kg	11.0	20.0
50 kg	15.0	30.0

TABLE X

(Made under regulations 53(b) and 126)

AUTOMATIC MACHINES

Use	Capacity	Error
Weighing small loads of tea, coffee, etc.	20 g and upwards	1/2% of the load in excess only
Weighing grain, etc.	5 kg and upwards	1/4% of the load in excess or deficiency
Weighing coal, etc.	50 kg and upwards	1/2% of the load in excess or deficiency
Totalizing machines	500 kg and upwards	1/2% of the total load of 30 loads in excess or deficiency

TABLE XI

(Made under regulation 132)

SELF-INDICATING WEIGHING INSTRUMENTS

Capacity of Instrument	Permissible error (g)
Under 1 kg	2
1 kg and under 5 kg	5
5 kg and under 10 kg	6
10 kg and under 15 kg	10
15 kg and under 30 kg	15
30 kg and under 50 kg	20
50 kg and under 75 kg	30
For capacities exceeding 75 kg the error shall not exceed the weight corresponding to one-half of the interval between consecutive graduations on the dial or chart.	

TABLE XII

(Made under regulation 157(a))

LIQUID MEASUREMENT PUMPS

Capacity of measure	Maximum permissible Errors	
	When new or After Repair (+) ml	On Verification or Inspection (+ or -) ml
250 ml	5	5
500 ml	10	10
1 L	10	10
2 L	20	20
5 L	50	50
10 L	50	50
20 L or More	0.5 percent	0.5 percent

TABLE XIII

(Made under regulations 161and 162)

METRIC CARAT WEIGHTS

Denomination (Metric Carat)	Weight in Grams	Error in excess only (mg)
500	100	6
200	40	6
100	20	4
50	10	4
20	4	2
10	2	2
5	1	1
2	0.4	1
1	0.2	1
0.5	0.1	1

FOURTH SCHEDULE

LICENCES

Form No. 1
UNITED REPUBLIC OF TANZANIA
WEIGHTS AND MEASURES AGENCY
MEASURING INSTRUMENT OR SYSTEMS
CLASS "A"
(Made under regulation 167(1))

No. LA 000000

This licence is granted to ……
of……..……
and authorizes him/her to install, overhaul, service or repair all types of Measuring Instrument or Systems or systems throughout the Mainland Tanzania:-

This licence is valid until……. Date of issue:……

…….
Commissioner for Weights And Measures

Form No. 2
UNITED REPUBLIC OF TANZANIA
WEIGHTS AND MEASURES AGENCY
MEASURING INSTRUMENT OR SYSTEMS/SYSTEM
LICENCE
CLASS "B"
([Made under regulations 167(2))

No. LB 000000

This licence is granted to…….
of……and authorizes him/her to install, overhaul, service or repair not more than six and not less than four types of Measuring Instrument or Systems or systems throughout the Mainland Tanzania:-

1. ……
2. ……
3. ……

4. ……
5. ……
6. ……

This licence is valid until……. Date of issue:…….

….……..
Commissioner for Weights And Measures

Form No. 3
UNITED REPUBLIC OF TANZANIA
WEIGHTS AND MEASURES AGENCY
MEASURING INSTRUMENT OR SYSTEMS/SYSTEMS
LICENCE
CLASS "C"
(Made under regulations 167(3))
No. LC 000000

This licence is granted to ……. of……..……and authorizes him/her to install, overhaul, service or repair not more than three types of Measuring Instrument or Systems or systems throughout the Mainland Tanzania:-

1. ……
2. ……
3. ……
4. ……

This licence is valid until…… Date of issue:…….

……
Commissioner For Weights And Measures

Form No. 4
THE UNITED REPUBLIC OF TANZANIA
WEIGHTS AND MEASURES AGENCY
MEASURING INSTRUMENT OR SYSTEMS/ SYSTEMS
LICENCE
CLASS "D"
(Made under regulation 167(4))

No. LD 000000

This licence is granted to……of……and authorizes him/her to erect, install, overhaul, adjust, service or repair Measuring Instrument or Systems or systems listed hereunder throughout the Mainland Tanzania:-

1. …….
2. …….
3. …….

This licence is valid until…… Date of issue:…….

……
Commissioner for Weights And Measures

Form No. 5
THE UNITED REPUBLIC OF TANZANIA
WEIGHTS AND MEASURES AGENCY
MEASURING INSTRUMENT OR SYSTEMS/SYSTEMS LICENCE
CLASS "E"
(Made under regulation 167(5))

No. LE 000000

This licence is granted to ……. of……and authorizes him/her to manufacture the following type(s) of Measuring Instrument or System(s) or systems listed hereunder throughout the Mainland Tanzania:-

1. ……
2. ……
3. ……
4. ……
5. ……

This licence is valid until……. Date of issue…….

……
Commissioner for Weights and Measures

FIFTH SCHEDULE

(Made under regulation 173)

VERIFICATION, PREPACKAGE TESTING AND OTHER CHARGEABLE FEES

1. Measurement of length for each measure:
   (a) not exceeding 500 millimetres 2,000/-
   (b) exceeding 500 millimetres and not exceeding 5metre.....5,000/-
   (c) exceeding 5 metre …… 15,000/-

2. Measures of capacity:
   A.
   (i) Un-subdivided measures of capacity used for direct selling of goods to customer:
   (a) not exceeding 250 millilitres 500/-
   (b) exceeding 250 millilitres but not exceeding 2 litres 1000/-
   (c) exceeding 2 litres but not exceeding 5 litres 2000/-
   (d) exceeding 5 litres but not exceeding 10 litres 4,000/-
   (e) exceeding 10 litres but not exceeding 20 litres 6,000/-
   (f) exceeding 20 litres but not exceeding 50 litres 10,000/-
   (g) exceeding 50 litres but not exceeding 100 litres 20,000/-
   (h) exceeding 100 litres but not exceeding 500 litres 30,000/-
   (i) exceeding 500 litres but not exceeding 1000 litres 60,000/-
   (j) exceeding 1000 litres but not exceeding 2000 litres 100,000/-
   (k) exceeding 2000 litres but not exceeding 5000 litres 160,000/-
   (l) exceeding 5000 litres but not exceeding 10000 litres 240,000/-
   (m) exceeding 10,000 litres …….300,000/-

   (ii) Un-subdivided measures of capacity used for verifying measures of capacity (eg. check pumps) in 2A(i):

(a) not exceeding 250 millilitres 2,000/-

(b) exceeding 250 millilitres but not exceeding 1 litre 3,000/-
(c) exceeding 1 litre but not exceeding 5 litres 5,000/-
(d) exceeding 5 litres but not exceeding 10 litres 14,000/-
(e) exceeding 10 litres but not exceeding 20 litres 20,000/-
(f) exceeding 20 litres but not exceeding 50 litres 30,000/-
(g) exceeding 50 litres but not exceeding 100 litres 40,000/-
(h) exceeding 100 litres but not exceeding 200 litres 50,000/-
(i) exceeding 200 litres but not exceeding 500 litres 100,000/-

(j) exceeding 500 litres but not exceeding 1000 litre200,000/-
(k)exceeding 1000 litres ……300,000/-

B.

(i) Sub-divided measures of capacity used for direct selling of goods to customers:

Fees chargeable shall be those applicable to similar un-subdivided measures plus in 2A (i) 50% of that rate.

(ii) Sub-divided measure of capacity for verifying measures in 2B(i):

Fees chargeable shall be those applicable to similar un-subdivided measures in 2A (ii) plus 50% of that rate.

3. Instruments-

(A) instruments for the measurement of liquid fuel and lubrication oil and alike:

a) Fuel dispenser…….75,000/- per each nozzle.
b) Twin container 50,000/-
c) Flow metres as verified or calibrated quarterly or after repair 500,000/-
d) Verification of fuel/oil unloading bulk flow metre(from ship tank) at port or other places……..2,500,000/-

(B) metrological supervision fee to terminals for monitoring measurements and inspecting measuring system or instruments during offloading/discharging of bulk oil/fuel from the ship tanker to final receiving tank farms per standard litre at 20 ^{0}C is Tshs. 1/- or at a rate as determined from time to time by EWURA or any other authorized institution.

4. Weights:

(i). Verification fees for lower class (M3 for each weight ;)

	DENOMINATION	FEES
(a)	not exceeding 100 g	500/-
(b)	not exceeding 100g but not exceeding 500 g	1000/-
(c)	Exceeding 500g but not exceeding 2kg	1500/-
(d)	Exceeding 2kg but not exceeding 5kg	2000/-
(e)	Exceeding 5kg but not exceeding 50kg	15,000/-
(f)	Exceeding 50kg but not exceeding 200kg	20,000/-
(g)	Exceeding 200kg but not exceeding 500kg	30,000/-
(h)	Exceeding 500 kg	100,000/-

(ii) Verification fees for higher class (M2 and above for each weight ;)

	DENOMINATION	FEES
(a)	Not exceeding 50 g	9,000/-
(b)	Exceeding 50 g but not exceeding 200 g	7,500/-
(c)	Exceeding 200 g but not exceeding 500 g	6,000/-
(d)	Exceeding 500 g but not exceeding 1 kg	9,000/-
(e)	Exceeding 1 kg but not exceeding 5 kg	15,000/-
(f)	Exceeding 5 kg but not exceeding 20 kg	20,000/-
(g)	Exceeding 20 kg	25,000/-

iii) Verification fees for Metric Carat Weight;

	DENOMINATION	FEES
(a)	Not exceeding 0.5 C.M	15,000/-
(b)	Exceeding 0.5 C.M but not exceeding 20 C.M	12,000/-
(c)	Exceeding 20 C.M but not exceeding 500 C.M	9,000/-
(d)	Exceeding 500 C.M	6,000/-

5. Verification fees for weighing instruments (Class III and IIII):

	DENOMINATION	FEES
(a)	not exceeding 5kg	7,000/-
(b)	exceeding 5kg but not exceeding 10kg	7,000/-
(c)	exceeding 10 kg but not exceeding 20kg	7,000/-
(d)	exceeding 20 kg but not exceeding 50kg	10,000/-
(e)	exceeding 50 kg but not exceeding 100kg	20,000/-
(f)	exceeding 100kg but not exceeding 200 kg	30,000/-
(g)	exceeding 200kg but not exceeding 300 kg	40,000/-
(h)	exceeding 300kg but not exceeding 500 kg	50,000/-
(i)	exceeding 500kg but not exceeding 2000 kg	60,000/-
(j)	exceeding 2000 kg but not exceeding 5000 kg	150,000/-
(k)	exceeding 5000kg but not exceeding 10000 kg	175,000/-
(l)	exceeding 10000kg but not exceeding 30000 kg	200,000/-
(m)	exceeding 30000kg but not exceeding 50000 kg	300,000/-
(n)	exceeding 50000kg but not exceeding 100000 kg	500,000/-
(o)	exceeding 100000kg but not exceeding 200000 kg	700,000/-
(p)	exceeding 200000 kg	800,000/-

NOTE

i. *Weighing instruments of higher class (I and II) shall be chargeable 100% extra fees of the rate stated in item 5.*

ii. *Weighing instruments stated in item 5 (a),(b),(c) and (d) plus numbers of weights not exceeding one set and adjustment if needed shall be charged Tshs. 7,000/- in total, irrespective of their capacities*

iii. *One set of weights means and include 50 g, 100 g, 200 g, 500 g, 1 kg, 2 kg and 5 kg.*

6. Pattern or type approval each instruments of lower class shall be 500% the fees chargeable for certification of such Measuring Instrument or System categorically.

   NB: 50% of the above fees shall be chargeable in addition for higher class instrument.

7. Verification of vehicle, lorries and alike for carrying sand and other ballast (each) 15,000/- per cubic metre
8. Verification of railway tank, skid tanks, road tank, ship tank and the like for each one litre of capacity 15/- per litre.
9. Verification of tyre pressure gauge, quarterly...(each)t 10,000/-
10. Verification of thermometer;
    (a) laboratory and clinical thermometer each 20,000/=
    (b) production and in stores thermometer each 25,000/=
11. Verification on utility meter (gas, electrical, water and alike) 10,000/=
12. Testing fees 50% of the prescribed verification or certification fees for a rejected instrument shall be chargeable.
13. Measuring Instrument or System used for buying or selling precious stones shall be chargeable 500% fee of the rates stated in items 5 above.
14. Measuring Instrument or System used in laboratories and pharmaceuticals shall be chargeable 300% fee of the rates stated in items 5 above.
15. Hiring out test weight of 500 kg per day, each 100,000/=
16. Hiring out proving tank per day each 500,000/=
17. Consultancy fee for legal metrology issues/matters is negotiable between the Agency and particular consumer (s) /Client(s)/ Customer(s).
18. (a) verification fees for initial 100,000 litres of a fixed storage tank ….10/= per litre and 70 cents per each litre increased thereafter

    (b) certification fees for the initial 100,000 litres of a fixed storage tank…..5/= per litre and 50 cents per each litre increased thereafter.

    (c) verification fees for fixed storage tanks below 100,000 litres …….50/= per litre

(d) certification fees for fixed storage tanks below 100,000 litres ……30/= per litre

(e) fees for a rejected fixed storage tank on subsequent testing shall be 50% of the corresponding certification fees.

SIXTH SCHEDULE

ADJUSTING FEES

(Made under regulation 173)

1.	Measures of capacity for each measure	50% of the prescribed stamping/certification fees for the particular measures.
2.	Instruments for measuring liquid fuel and lubricating oil for each instrument	100% of the prescribed stamping/certification fees for the particular instrument.
3.	Weights: For each weight	50% of the prescribed stamping/certification fees for the particular weight.
4.	Weighing instruments	The fee chargeable for each instrument exceeding 50 kg shall be at the rate of the prescribed verification fees for that particular weighing instrument.

SEVENTH SCHEDULE

APPLICATION, LICENCE AND MISCELLANEOUS FEES

(Made under regulation 180(3)and 191(4))

1. Application fees (Tshs.)
   (a) For repair of weighing instrument …50,000/= for Tanzanian citizens and 200,000/= for non-citizen.
   (b) For repair of liquid Measuring Instrument or Systems 50,000/= for Tanzanian citizens and 200,000/= for non-citizen.
   (c) For other weights and measures practitioners 50,000/= for Tanzanian citizens and 200,000/= for non-citizen.
   (d) Cargo declaration form ……10,000/=
2. Licence fees (Tshs.)
   (a) Class A Licence (All weighing instruments)…….100,000/=
   (b) Class B Licence 6 types and not less than 4 types 75,000/=

(c) Class C Licence 4 types and not less than 2 types 50,000/=
(d) Class B Licence for repair of Measuring Instrument or Systems 250,000/=
(e) Class E Licence for Measuring Instrument or System manufacturing..300,000/=
(f) Tank construction Licence 800,000/=
(g) Fixed storage tank verification Licence 400,000/=

3. Miscellaneous fees:

(a) Affixing solder studs (each)…….. 5,000/=

(b) Denominating a metal measure (each) ……5,000/=

(c) Denominating a metal measure (each) ……..5,000/=

(d) Balancing a weighing instrument (each) ……1,500/=

(e) Cleaning/dusting of weighing or Measuring Instrument or System (each) …50% to the prescribed verification fees

(f) Inserting of plug (each) ……. 2,000/=

(g) Cleaning of dipstick (each) ……15,000/=

(h) Retyping, copy of verification chart (each) ……. 20,000/=

(i) Retyping of verification sticker …… 20,000/=

(j) Transfer of readings on another dipstick (each) ……. 50,000/=

(k) Verification of vehicle tank/railway wagon ……. 15/- per litre calibrated from another country

(l) Where any weight, measure, weighing or Measuring Instrument or System used or intended to be used in health sector has been examined, tested and/or verified by an inspector, a fee chargeable shall be equal to 50% of the prescribed stamping fee on a similar instrument.

(m) Any other service rendered 20% of prescribed fee.

(n) Certification of automatic filler, packer, weigher, measure and alike. (each).

FILLING/ PACKING OUTLETS FEES

1 to 5	150,000/=
6 to 20	200,000/=
21 to 50	250,000/=
51 to 80	600,000/=
81 to 100	800,000/=
Exceeding 100	1,000,000/=

(o) Where an Inspector is delayed in the conduct of a test through negligence or failure on the part of a person submitting any weight, measure, weighing or Measuring Instrument or System for verification or where he is delayed awaiting minor adjustment to be made by a repairer, the Inspector shall charge a fee at the rate equal to the verification fee for that weight, measure, weighing or Measuring Instrument or System per hour so delayed with proportional part of an hour, so delayed.

EIGHTH SCHEDULE

FEES

(Made under regulation 176)

1. For goods manufactured/ produced/made or packed in Mainland Tanzania, fees shall be charged as follows:

Category	Lot size	Sampling	No. of product denomination	Fees
Goods manufactured/ produced/made or packed in Mainland Tanzania	0-100	100%	Each	30,000/-
	101-500	50	Each	100,000/-
	501-3200	80	Each	200,000/-
	3201 and above	125	1-5 Each	300,000/-
			6-10 Each	200,000/-
			11 and above, each	100,000/-

2. For purpose of charging fees, all items which are above 50g or 50ml but not exceeding 200g or 200ml, shall be compounded to form single package approximately or equal to 1000g or 1000ml as single package for purpose of determining lot size.

3. For imported goods;
   (b) for the first 10 items bearing the highest F.O.B value, fees shall be 0.2% of F.O.B for each item or Tanzanian shillings 100,000 whichever is higher.
   (c) for the following number of items above 10, Tanzanian Shillings 20,000 shall be charged for each item.

4. For the purpose of this paragraph, "item" means products with the same brand name, same measure and which comprise a single test report.

NINTH SCHEDULE

(Made under regulation 177)

C/N: 00000001

The United Republic of Tanzania
The Weights and Measures Agency

CERTIFICATE OF CONFORMITY OF PRE-PACKED GOODS

Name of Weights and Measures Inspector……..
I hereby certify that I have this day inspected and/ tested the under-mentioned goods/products:

Belonging to…… of…….
Tel…… Bill of lading No……..

This ……..day of……..20…….
Signature……

Regional Manager's name:……
Signature: ……..
Date: …….
NB. This certificate is issued on conformity to the Weights and Measures (Packed Goods) Regulation 1998 and it shall be revoked in case of violation.

TENTH SCHEDULE

(Made under regulation 178(1))

R/N: 0000001

The United Republic of Tanzania
The Weights and Measures Agency

PRE-PACKAGED GOODS REJECTION NOTE

To……
Of…….
Tel……
Bill of lading No……..

I,……being an Inspector of Weights and Measures do hereby certify that I have rejected the under mentioned goods/products for non-conformity to Weights and Measures (Packed Goods) Regulations.

This ……..day of……..20…….

Signature……

ELEVENTH SCHEDULE

(Made under regulations 182(2), 183(2)(b), 185(1), 186(1)(b)188(1),189 and 190),

R/N: 0000001

The United Republic of Tanzania
The Weights and Measures Agency

PACKED GOODS

TABLES
TABLE IA
UNITS OF MEASUREMENTS

Unit	Symbol
milligram	mg
gram	g
kilogram	kg
tonne	t
litre	L or l
millilitre	ml or mL
micrometre	Mm
millimetre	mm
centimetre	cm
decimetre	dm
metre	m
square millimetre	mm^2
square centimetre	cm^2
square decimetre	dm^2
square metre	m^2
cubic metre	m^3
cubic centimetre	cm^3
cubic decimetre	dm^3
cubic metre	m^3

(a) Neither a period nor the letter "s" should be used after any of the symbols.
(b) A single space should be used to separate the number from the unit of measurement.

TABLE IB
CHOICE OF UNIT

Type of measure	Net quantity of products (q)	Units
Volume (liquids)	≤1000 ml ≤1000 ml	mL or ml L or l
Volume - Cubic (solids)	≤1000 cm^3 (1 dm^3 1 dm^3 q < < 1000 dm^3 1000 dm^3 ≤ q	cm^3, ml dm^3, L (l) m^3
Mass	<g	mg
	1g<g <q <100g	g
	1000g ≤ q	kg
Length	q<1mm	mm
	1mm ≤ q < 100cm	mm or cm
	100 cm ≤ q	m
Area	<100cm^2 (1dm^2)	mm^2
	1 dm^2 ≤ 100 d dm^2	dm^2
	(1m^2)	m^2

TABLE IIA
MINIMUM HEIGHT OF NUMBERS AND LETTERS

Area of principal display panel in cm^2	*Minimum height of numbers and letters in mm*	*Minimum height labelled information blown, formed or moulded on a surface on container in mm*
> 32	1.6	3.2
> 32 ≤ 161	3.2	4.8
> 161 ≤ 645	4.8	6.4
> 645 ≤ 2581	6.4	7.9
> 2581	12.7	14.3

TABLE IIB
MINIMUM HEIGHT OF NUMBERS AND LETTERS

Net contents	*Minimum height of numbers and letters in mm*
≤ 50g or 50 ml	2
< 200g or (ml)	3
> 200g (ml) ≤1 kg(1)	4
> 1kg (or L)	6

TABLE IIIA
MINIMUM NUMBER OF SAMPLE SIZE

BATCH SIZE	SAMPLE (n)
≤ 100	100%
>101-500	50
>501 – 3200	80
>3201	125

TABLE IIIB
RELATIONSHIP BETWEEN SAMPLE SIZE K-FACTOR AND ACCEPTANCE NUMBER

SAMPLE	K-Factor	ACCEPTANCE NUMBER OF PACKAGES SHOWING MORE THAN MAXIMUM PERMISSIBLE ERROR (C)
50	0.379	3
80	0.295	5
125	0.234	7

TABLE IIIC
ACCEPTABLE INDIVIDUAL DEFICIENCIES

NOMINAL NET CONTENT	TOLERABLE DEFICIENCY T	
g or ml	PERCENT OF Qn	g or ml
5 to 50	9	-
50 to 100	-	4.5
100 to 200	4.5	-
200 to 300	-	9.0
300 to 500	3	-
500 to 1000	1.5	15
1000 to 10000	1.5	-
10000 to 15000	-	150
15000 to 25000	1.0	-

TABLE IV
PRE-PACKED INSPECTION FORM
(Made under regulation 175(3) and 187(1))

Weight/measure checking Data Sheet

A. Particulars of Package

Name of manufacturer or packer .....
Address .....
.....
.....

Month/Year ..... Batch Size ..... Price .....

B. *Commodity*

Name of commodity/product .....
Sample Size .....

C. Sample No.

Gross weight/measure ..... Tare weight/measure .....

D. Weight/measure Checking

1. ……..
2. ……..
3. ……..
4. ……..

E. Results

Average weight/measure ..... Declared weight/measure

Maximum permissible error .....

Number of packages showing error in deficiency .....

F. General comments with regard to the compliance with the Act and the Regulations made thereunder

.....

.....

.....

G. *Signature and Name of Manufacturer/ Packer/Owner or any competent witness* — *Signature and Name of the Inspector*

....

Date: .....

Time: .....

Dodoma
27th March, 2019

JOSEPH G. KAKUNDA
Minister for Industry, Trade and Investment